TECHNICAL CATALOGUE

Made in Italy

C ENG 01

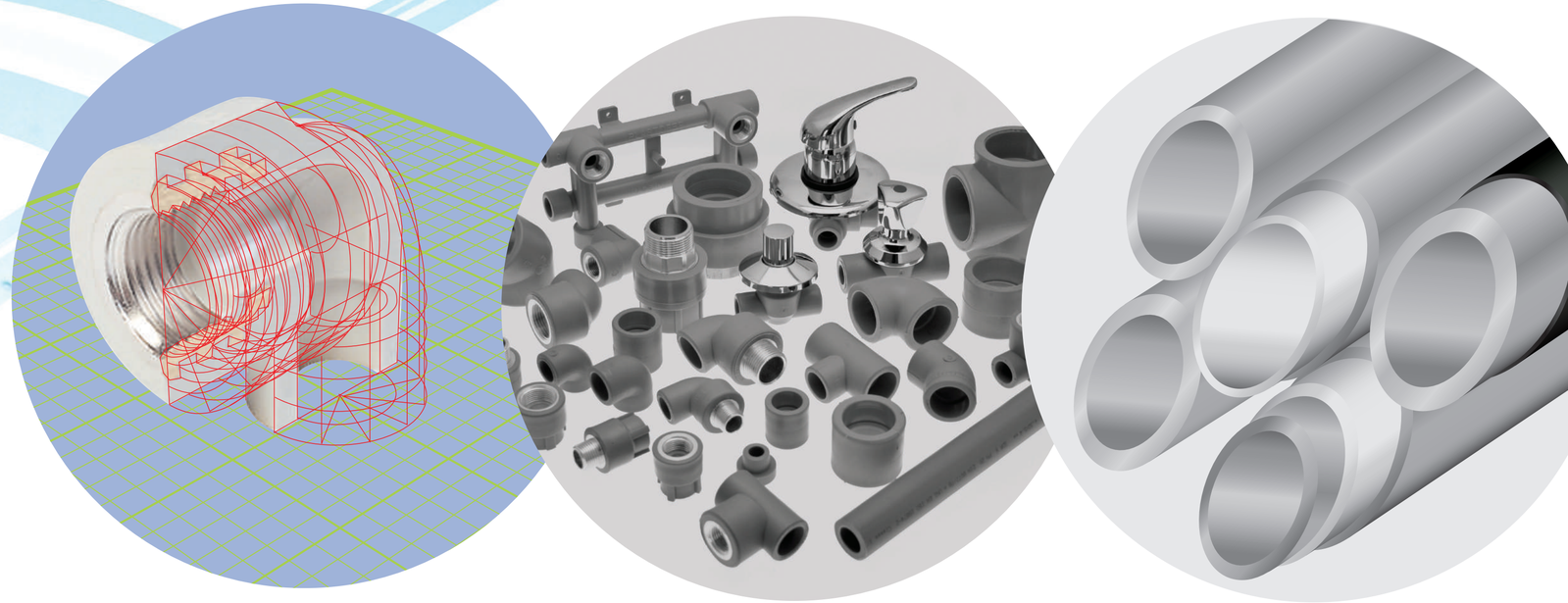

Member of CISQ Federation

RINA

IQNET

CERTIFIED MANAGEMENT SYSTEM

ISO 9001

Plastofer®

Mission
Quality policy
Raw material
Product range
Application areas
Pipes
Fittings
Mounting guidelines
Welding
Insulation
Service life
Pressure test
Chemical compatibility
Quality assurance
Boxing and shipping
Contactss

Mission

Plastofer is among the earliest manufacturers of plastic sanitary installations, operating since 1958. The company initially produced plastic films, then transitioned to manufacturing low- and high-density polyethylene (PE-LD/PE-HD) pipes and fittings for water, gas, and irrigation networks. Since 1989, Plastofer has focused on PP-R (random polypropylene) pipes and fittings, ultimately making it our exclusive line of production.

Our products are made of PP-R, a material engineered for indoor water installations and central heating systems. We offer a complete system of pipes, stabi pipes, glass fibre reinforced pipes, and fittings, with diameters from ø20 to ø110 mm, along with complementary components.

The quality of Plastofer products is verified by independent research institutes. We hold all essential technical approvals and a Hygienic Certificate, and we are subject to continuous oversight by external engineering bodies to ensure consistently high product quality. Plastofer systems have a service life of up to 50 years.

The wide range of available diameters (ø20–ø110 mm) enables the construction of hydro sanitary systems in both small and large buildings, as well as water mains on boats; residential apartments and condominiums; public housing; hospitals, schools, and laboratories; hotels and resorts; office buildings; and commercial shopping centres. Our systems perform excellently in conveying drinking water and other fluids.

Plastofer stands out for its unique blend of meticulous craftsmanship and a broad, globally informed market vision, acquired throughout the years.

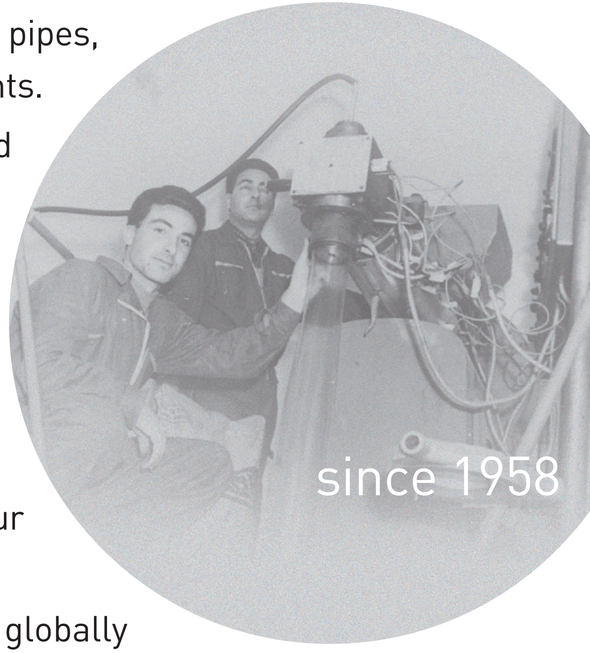

Mission
Quality policy
Raw material
Product range
Application areas
Pipes
Fittings
Mounting guidelines
Welding
Insulation
Service life
Pressure test
Chemical compatibility
Quality assurance
Boxing and shipping
Contacts

A philosophy of *craft* production

Plastofer conceives, designs, and manufactures every product in-house, a safeguard that adds significant value to our company. Always attentive to technological innovation, we maintain full control at every stage: from raw materials and their initial processing, through the design and production of each item, to hand-finished packaging. The skill of our technicians—and their knowledge of the entire production cycle—distinguishes our company for quality and reliability.

This production model enables us to meet any specific requirement. We offer customised product series tailored to precise needs, supported by high production flexibility. While upholding our craftsmanship philosophy, we apply the most advanced expertise and technologies in the plastics sector, without neglecting productivity, in line with the demands of domestic and international markets.

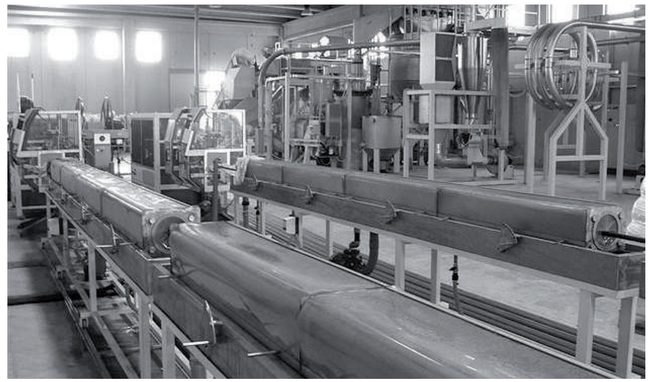

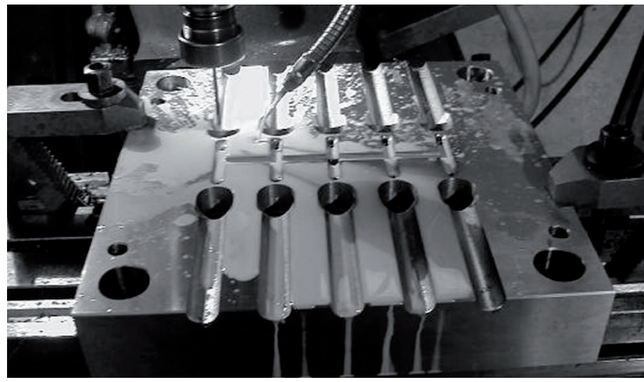

Mission
Quality policy
Raw material
Product range
Application areas
Pipes
Fittings
Mounting guidelines
Welding
Insulation
Service life
Pressure test
Chemical compatibility
Quality assurance
Boxing and shipping
Contacts

The value of Plastofer Made in Italy

Italy is the cradle of creativity. Its artisan tradition and distinctive style are recognised and admired worldwide, and the Made in Italy label has long represented added value, sophistication, and refinement. Italian products are instantly recognisable for their attention to detail and the aesthetic values they embody. In the collective imagination—both in Italy and abroad—choosing Italian products means style, creativity, innovation, class, and quality.

In line with this great tradition, Plastofer Srl designs and manufactures products that are entirely Made in Italy. Through rigorous material selection and processes guided by total quality criteria, we are able to produce and offer customers a comprehensive range of Made in Italy products.

Plastofer

- 100% Made in Italy.
- The choice of businesses that demand quality.
- The brand customers look for—and consumers thank

Our primary export areas include

- North Africa
- Middle East
- Europe
- Asia
- South America

Mission
Quality policy
Raw material
Product range
Application areas
Pipes
Fittings
Mounting guidelines
Welding
Insulation
Service life
Pressure test
Chemical compatibility
Quality assurance
Boxing and shipping
Contacts

Company Quality Policy

The water and sanitary sector has faced the same global headwinds affecting manufacturing worldwide. Despite this challenging environment—marked by uncertainty and pessimism—PLASTOFER has not only maintained but strengthened its presence in export markets. This achievement stems from the competence and commitment of our people, who have fully embraced management's focus on customer service and product quality.

Our quality driven strategy has reinforced our reputation among customers, suppliers, and competitors, further enhancing our market image during difficult times. Building on these positive results, management reaffirms the central importance of the customer and their needs.

Managerial activities will continue to be guided by the following objectives:

- Strong focus on customer needs.
- Continuous improvement of production cycle capability and efficiency.
- Maintenance of company certification in accordance with UNI EN ISO 9001:2015.

Managers are responsible for providing the tools and resources necessary to achieve these objectives.

PLASTOFER looks ahead with confidence to continued productive work and a stable, prosperous business future.

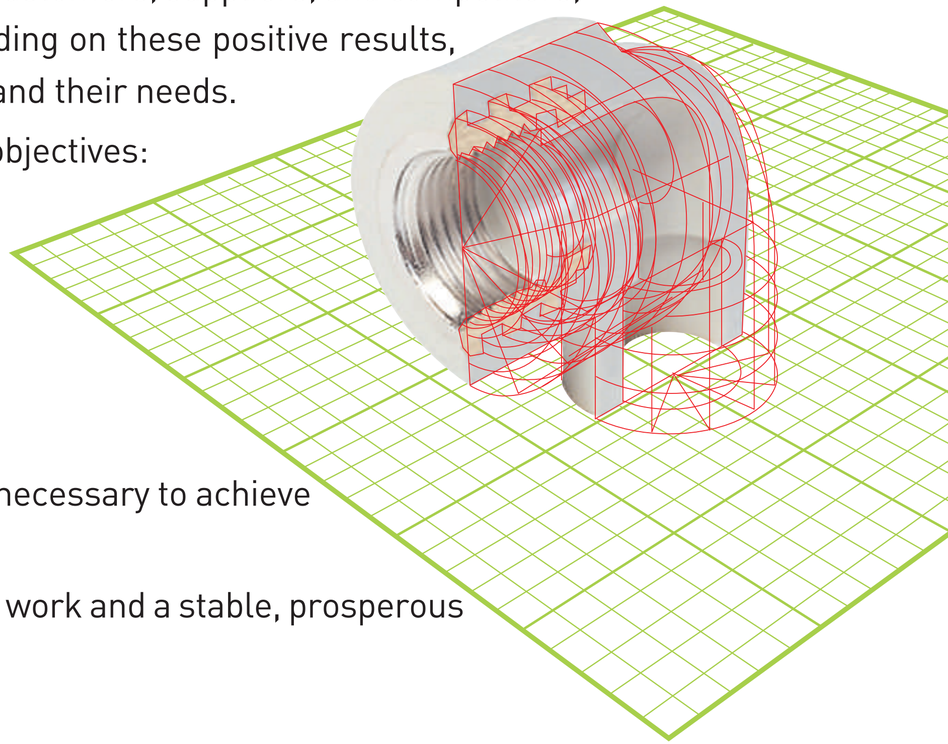

Mission
Quality policy
Raw material
Product range
Application areas
Pipes
Fittings
Mounting guidelines
Welding
Insulation
Service life
Pressure test
Chemical compatibility
Quality assurance
Boxing and shipping
Contacts

Company Quality Policy

Schematic representation of the process of managing external suppliers and products

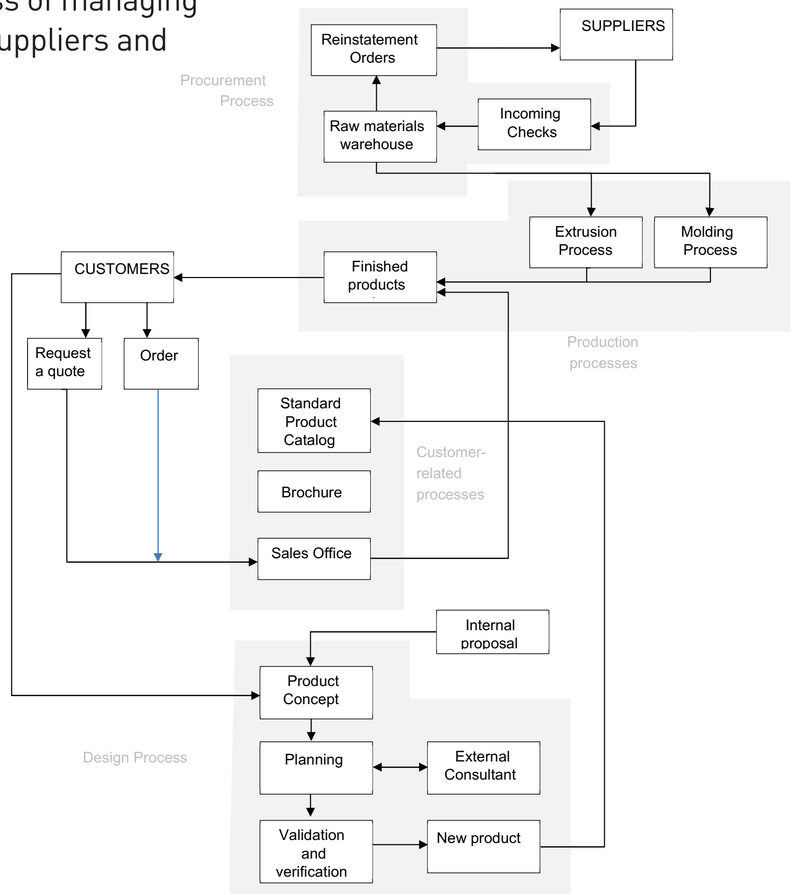

Organizational chart of PLASTOFER Srl

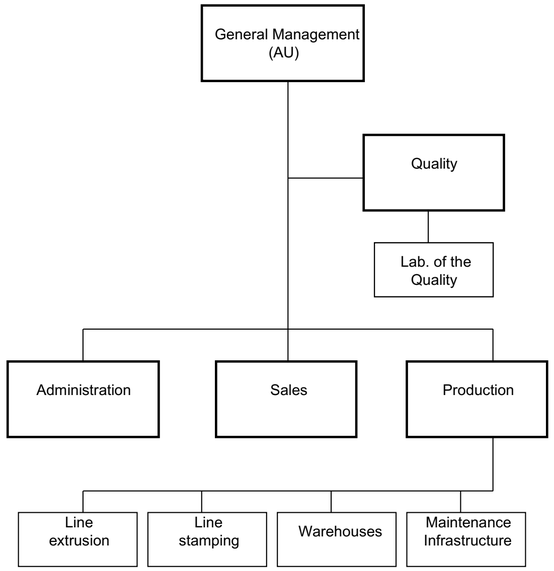

Mission
Quality policy
Raw material
Product range
Application areas
Pipes
Fittings
Mounting guidelines
Welding
Insulation
Service life
Pressure test
Chemical compatibility
Quality assurance
Boxing and shipping
Contacts

Plastofer production

Production is the core of our business. We employ latest generation machinery and high tech instruments to ensure the highest product quality, with rigorous attention to accuracy throughout the entire manufacturing process.

Our facility comprises 3 extrusion lines, 12 injection moulding machines, and more than 100 moulds. Leveraging strong technical expertise, Plastofer optimises equipment efficiency to achieve high output levels and ensure substantial production capacity.

Total Production

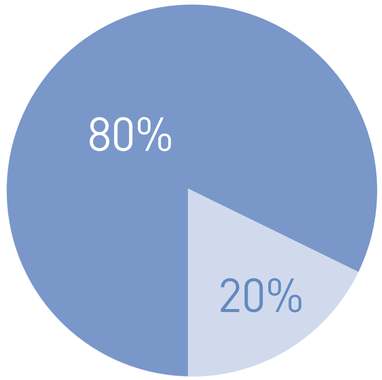

80% export
20% home market

Export Production

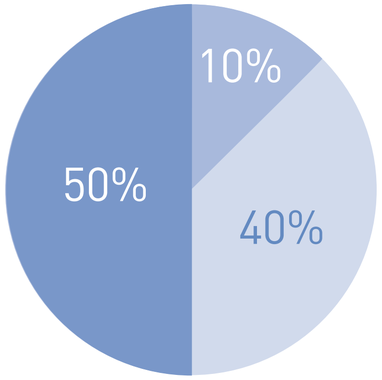

50% Africa
40% Middle East
10% other

Annual Production

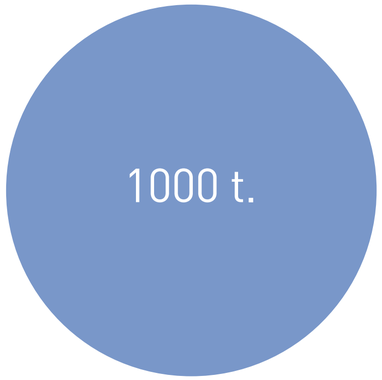

Mission
Quality policy
Raw material
Product range
Application areas
Pipes
Fittings
Mounting guidelines
Welding
Insulation
Service life
Pressure test
Chemical compatibility
Quality assurance
Boxing and shipping
Contacts

Raw material

- Specification: Pipes and fittings in the Plastofer system are made from polypropylene random copolymer, Type 3 - PP R80 and PP-RCT
- Performance: PP R offers high strength, dimensional stability, and resistance to elevated temperatures.
- Compliance: Its physical and chemical properties meet the specific requirements of drinking water supply and heating systems.

PP-R selected technical features

Properties of Unit PP-R value		Unit	PP-R value	Test method
Density		g/cm³	0.90	ISO 1183
Met Flow Rate (230°C/2,16kg)		g/10min	0.30	ISO 1133 Condition 12
Coefficient of Linear Thermal Expansion		1/K	1.5x10-4	DIN 53752
Thermal Conductivity		W/m K	0.24	DIN 52612
Modulus of Elasticity in tension (1mm/min)		MPa	900	ISO 527
Charpy's Impact Strenght, notched	+23°C	kJ/m2	20	ISO 179
	0°C	kJ/m2	4	
	-23°C	kJ/m2	2	

PP-R selected technical features

1. Long life service – even 50 years
2. Corrosion resistance
3. Low thermal conductivity – 0,22 W/m°K
4. High resistance to inner pressure
5. Low pipe friction- low roughness rate – low flow resistance
6. High surface smoothness – lack of lime scale formation as in other systems
7. Quick, easy and clean assembly
8. Total reliability and leak tightness of joints
9. Low price when compared to other materials
10. Resistance to many chemical agents
11. Weight low
12. Esthetic appearance
13. Vibration and noise suppression
14. Good electric current insulator
15. Sterility
16. Environmental friendliness (recycling)
17. No harmful gas emission from burning
18. Light impermeability – no risk of algae development
19. One type of pipe connectors to all pipes
20. Non-toxic
21. Smell and taste neutral.
22. Very good welding applications
23. Resistance to abrasion
24. No change in organoleptic properties of water
25. High cracking resistance under stress

Mission
Quality policy
Raw material
Product range
Application areas
Pipes
Fittings
Mounting guidelines
Welding
Insulation
Service life
Pressure test
Chemical compatibility
Quality assurance
Boxing and shipping
Contacts

Raw material

Service life of Plastofer's system

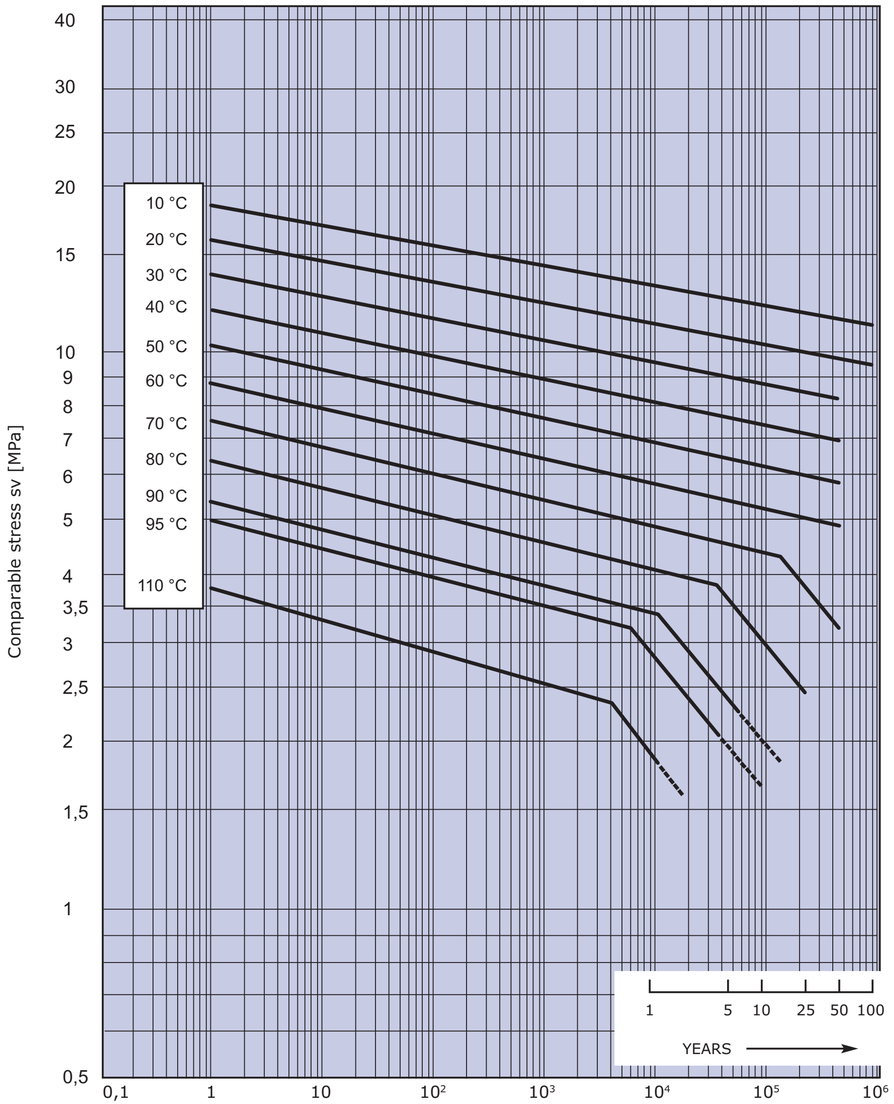

Service life in hours
Termination of an isotherm indicates maximum service life also at lower tension.
The isotherms in the chart do not extended.

Mission
Quality policy
Raw material
Product range
Application areas
Pipes
Fittings
Mounting guidelines
Welding
Insulation
Service life
Pressure test
Chemical compatibility
Quality assurance
Boxing and shipping
Contacts

Product range - PP R Pipes and Fittings

Sizes

- Pipes and fittings are produced in the following nominal diameters: 20, 25, 32, 40, 50, 63, 75, 90, 110 mm.

Pressure lines and wall thicknesses

- SDR 11: typically for cold water and underfloor heating.
- SDR 7.4: typically for hot water and underfloor heating.
- SDR 6: typically for hot water and central heating.

STABI pipes (aluminium layer)

- Structure: three layer construction. A PP R base pipe is laminated with an aluminium foil and then coated with an external thin PP layer.
- Performance: the aluminium layer improves pressure and temperature resistance, increases rigidity, and reduces thermal expansion—features similar to steel pipes.
- Note: the external PP layer primarily provides mechanical protection for the aluminium and an aesthetic finish; it does not change the pipe's mechanical properties.

Glass fibre reinforced PP R pipes

- Technology: multilayer, co extruded construction using specialised equipment.
- Performance: reduced thermal expansion coefficient and high pressure resistance for enhanced performance.

Mission
Quality policy
Raw material
Product range
Application areas
Pipes
Fittings
Mounting guidelines
Welding
Insulation
Service life
Pressure test
Chemical compatibility
Quality assurance
Boxing and shipping
Contacts

Product range - PP R Pipes and Fittings

Applications

- Designed for cold and hot water installations, as well as underfloor and central heating systems.
- Suitable for distribution of various fluids thanks to PP R's chemical resistance and related properties.

Marking

- Standards compliance: Production complies with UNI EN ISO 15874 and German standards DIN 8077 and DIN 8078.
- Process: Pipes and fittings are marked during manufacturing to ensure full traceability and quality control.

Pipe marking (example) PLASTOFER PP R Type 3 • DIN 8077/8078 • UNI EN ISO 15874 • Ø20 × 3.4 • SDR 6 • 1/10 bar • Class 2/8 bar • Date: [DD/MM/YY] • Made in Italy • Line No. [X]

Fitting marking

- Plastofer logo
- Material/type (PP R), size, PN or S series
- Made in Italy
- Date

Packaging

- Carton boxes with inner plastic bags containing the fittings.

Quality and traceability

- Complete, standard based marking across all components supports quality control and provides evidence for any warranty claims.

PN	S	SDR
10	5	11
16	3,2	7,4
20	2,5	6
25	2	5

PN = Nominal Pressure
S = Series
SDR – Standard Dimension Ratio
SDR = 2xS+1 = d/s
d - external diameter of pipe,
s - wall thickness

Mission
Quality policy
Raw material
Product range
Application areas
Pipes
Fittings
Mounting guidelines
Welding
Insulation
Service life
Pressure test
Chemical compatibility
Quality assurance
Boxing and shipping
Contacts

Application Areas

Plastofer System
PP-R pipes and fittings

Applications

- Potable water application
- Chilled water technology
- Chemical transport
- Heating system construction
- Agricolture
- Rainwater application
- Connection heating and cooling
- Swimming-pool technology
- District heating pipeline system

Mission
Quality policy
Raw material
Product range
Application areas
Pipes
Fittings
Mounting guidelines
Welding
Insulation
Service life
Pressure test
Chemical compatibility
Quality assurance
Boxing and shipping
Contacts

Application Areas

Operating conditions according to UNI EN ISO 15874

In terms of pressure and temperature for pipes and fittings, the operating conditions set forth in ISO 15874 are taken as the basic conditions. Water supply and heating systems are classified according to ISO 15874 in the following way:

Appl. class	Design temp. T_D	Time at T_D	Max.design temp.	Time at T_{max}	Emerg. temp.	Time at $T_{emerg.}$	Scope of application
	°C	years	°C	years	°C	hours	
1	60	49	80	1	95	100	Hot water supply (60°C)
2	70	49	80	1	95	100	Hot water supply (70°C)
4	20 40 60	2,5 20 25	70	2,5	100	100	Floor heating Low temp. radiators
5	20 60 80	14 25 10	90	1	100	100	High-temperature heating

T^D. - design temperature defined by the application.
T^{max}. - maximum design temperature, with its time-limited exposure.
T^{emerg}. - emergency temperature arising under emergencies due to troubles in control systems.

Mission
Quality policy
Raw material
Product range
Application areas
Pipes
Fittings
Mounting guidelines
Welding
Insulation
Service life
Pressure test
Chemical compatibility
Quality assurance
Boxing and shipping
Contacts

Application areas

Service life

- The maximum service life for each application class is determined by the cumulative operating time at the defined temperatures TD, Tmax, and Temerg, and is up to 50 years.
- Additional application classes may be defined, but temperatures must not exceed those specified for Class 5.

Pressure and class selection

- ISO 15874 specifies the admissible maximum operating pressure for each PP R pipe type.
- Proper pipe selection during design is essential and must be based on operating data: application class and design/operating pressure.
- The calculated series value Smax must be greater than the pipe's series S indicated on Plastofer pipes and in our technical

Design pressure P_D	Application			
Bar	calculated series S_{max}			
	Class 1	Class 2	Class 4	Class 5
4	6,9	5,3	6,9	4,8
6	5,2	3,6	5,5	3,2
8	3,9	2,7	4,1	2,4
10	3,1	2,1	3,3	1,9

Mission
Quality policy
Raw material
Product range
Application areas
Pipes
Fittings
Mounting guidelines
Welding
Insulation
Service life
Pressure test
Chemical compatibility
Quality assurance
Boxing and shipping
Contacts

Application areas

documentation.

Example (selection check)

- Pressure line PN 20 = Series S 2.5.
- According to the selection rule, S ⩽ S calc max must hold.
- For hot water use with scald protection (max hot water temperature 60 °C) — Class 1:
  - Permissible operating pressure: 10 bar (check: 2.5 ⩽ 3.1).
  - Durability profile: 49 years at 60 °C, 1 year at 80 °C (temporary temperature rise), and 100 hours at 95 °C (emergency).
- The same selection logic applies to other application classes.

Marking shorthand on pipes

- Class 1/10 bar, Class 2/8 bar, Class 4/10 bar, Class 5/6 bar indicate the application class and maximum operating pressure.

Mission
Quality policy
Raw material
Product range
Application areas
Pipes
Fittings
Mounting guidelines
Welding
Insulation
Service life
Pressure test
Chemical compatibility
Quality assurance
Boxing and shipping
Contacts

series
CLASSIC
CLASSIC-UV
POWER
POWER-PLUS
POWER-UV
FIBER-REINFORCED

Pipes - PP RCT Evolution and Reinforced Options

PP RCT POWER system

- Plastofer's POWER system is our response to the evolution of the PP RCT market.
- The pipe's white inner layer includes additives that enhance strength and purity, enabling reduced wall thickness and increased water flow rate.
- With superior dimensional stability, these pipes are well suited to heating and cooling systems, compressed air networks, and diverse industrial applications.

Plastofer PP RCT (ß nucleated)

- Our ß nucleation process refines the crystalline structure of PP RCT, improving resistance to specific chemical agents.
- The updated formulation and production process deliver higher pressure resistance, particularly at elevated temperatures.

Glass fibre reinforced PP R (FIBERGLASS)

- Construction: three layer PP R with a central glass fibre reinforcement.
- Performance: low thermal expansion, increased resistance to mechanical damage, and reduced gas permeability—especially beneficial in closed circuit heating installations.
- Joining: standard socket fusion/welding methods used for traditional PP R are sufficient.

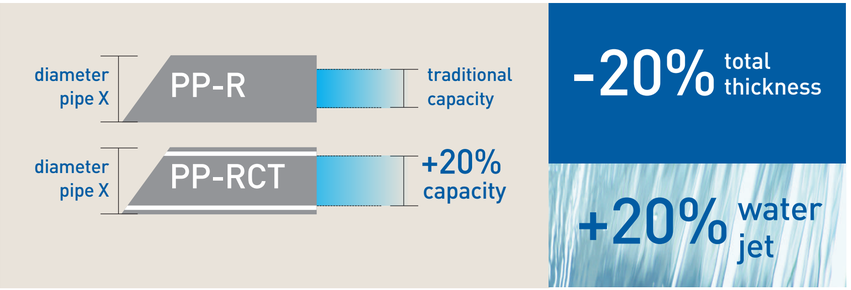

Colors

Mission
Quality policy
Raw material
Product range
Application areas
Pipes
Fittings
Mounting guidelines
Welding
Insulation
Service life
Pressure test
Chemical compatibility
Quality assurance
Boxing and shipping
Contacts

series
CLASSIC
SDR 6
SDR 7,4
SDR 11
CLASSIC-UV
POWER
POWER-PLUS
POWER-UV
FIBER-REINFORCED

series
CLASSIC

SDR 6

Applications

POTABLE WATER APPLICATION
HEATING SYSTEM CONSTRUCTION
CONNECTION HEATING AND COOLING
CHILLED WATER TECHNOLOGY
AGRICOLTURE
SWIMMING-POOL TECHNOLOGY
CHEMICAL TRANSPORT
RRAINWATER APPLICATION
DISTRICT HEATING PIPELINE SYSTEM

Material: PPR
Type: S 2,5
Color: green
Supply: bars of 3-4 meters
Standards: UNI EN ISO 15874-2
DIN 8077
DIN 8078

Cod	d	d_1	S	Kg/m	PN	SDR
532020	20	13,2	3,4	0,172	20	6
532025	25	16,6	4,2	0,266	20	6
532032	32	21,2	5,4	0,434	20	6
542020	20	13,2	3,4	0,172	20	6
542025	25	16,6	4,2	0,266	20	6
542032	32	21,2	5,4	0,434	20	6
542040	40	26,6	6,7	0,671	20	6
542050	50	33,4	8,3	1,040	20	6
542063	63	42,0	10,5	1,650	20	6
542075	75	50,0	12,5	2,340	20	6
542090	90	60,0	15,0	3,360	20	6

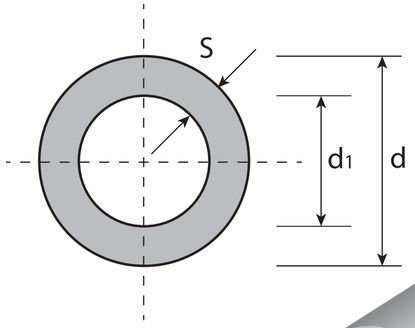

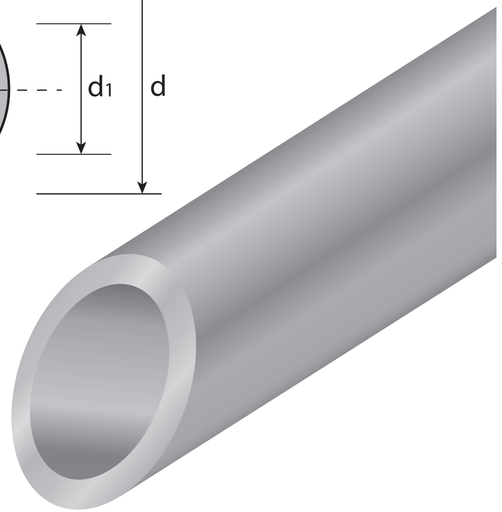

Mission
Quality policy
Raw material
Product range
Application areas
Pipes
Fittings
Mounting guidelines
Welding
Insulation
Service life
Pressure test
Chemical compatibility
Quality assurance
Boxing and shipping
Contacts

series
CLASSIC
SDR 6
SDR 7,4
SDR 11
CLASSIC-UV
POWER
POWER-PLUS
POWER-UV
FIBER-REINFORCED

series
CLASSIC

SDR 7,4

Applications

Material: PPR
Type: S 3,2
Color: green
Supply: bars of 4 meters
Standards: UNI EN ISO 15874-2
DIN 8077
DIN 8078

Cod	d	d_1	S	Kg/m	PN	SDR
541620	20	14,4	2,8	0,148	16	7,4
541625	25	18,0	3,5	0,230	16	7,4
541632	32	23,2	4,4	0,370	16	7,4
541640	40	29,0	5,5	0,575	16	7,4
541650	50	36,2	6,9	0,896	16	7,4
541663	63	45,8	8,6	1,410	16	7,4
541675	75	54,4	10,3	2,010	16	7,4
541690	90	65,4	12,3	2,870	16	7,4
5416110	110	79,8	15,1	4,300	16	7,4

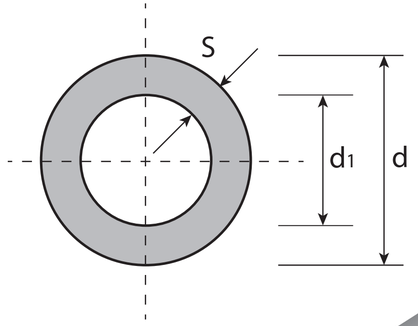

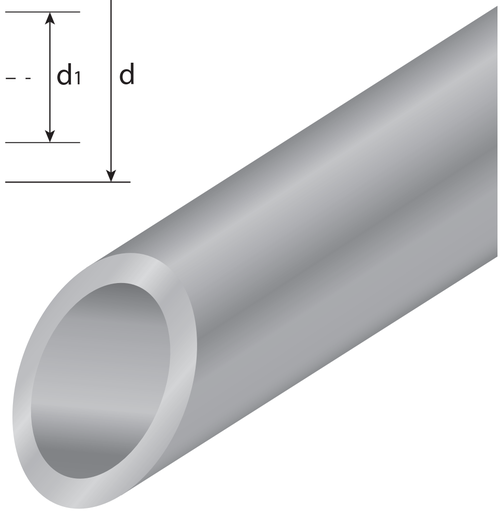

Mission
Quality policy
Raw material
Product range
Application areas
Pipes
Fittings
Mounting guidelines
Welding
Insulation
Service life
Pressure test
Chemical compatibility
Quality assurance
Boxing and shipping
Contacts

series
CLASSIC
SDR 6
SDR 7,4
SDR 11
CLASSIC-UV
POWER
POWER-PLUS
POWER-UV
FIBER-REINFORCED

series
CLASSIC

SDR 11

Applications

POTABLE WATER APPLICATION | HEATING SYSTEM CONSTRUCTION | CONNECTION HEATING AND COOLING | CHILLED WATER TECHNOLOGY | AGRICOLTURE | SWIMMING-POOL TECHNOLOGY | CHEMICAL TRANSPORT | RRAINWATER APPLICATION | DISTRICT HEATING PIPELINE SYSTEM

Material: PPR
Type: S 5
Color: green
Supply: bars of 4 meters
Standards: UNI EN ISO 15874-2
DIN 8077
DIN 8078

Cod	d	d_1	S	Kg/m	PN	SDR
541032	32	26,2	2,9	0,261	10	11
541040	40	32,6	3,7	0,412	10	11
541050	50	40,8	4,6	0,638	10	11
541063	63	51,4	5,8	1,010	10	11
541075	75	61,4	6,8	1,410	10	11
541090	90	73,6	8,2	2,030	10	11
5410110	110	90,0	10,0	3,010	10	11

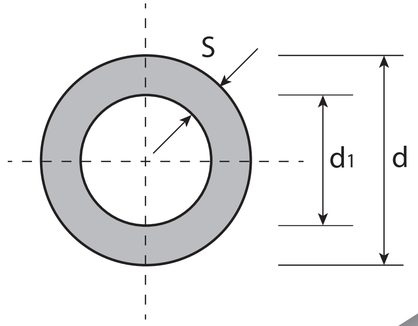

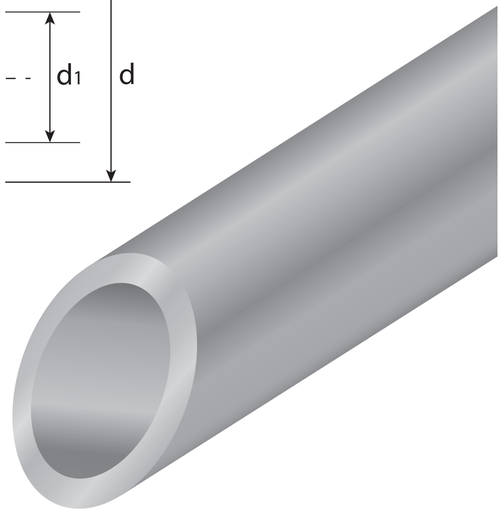

Mission
Quality policy
Raw material
Product range
Application areas
Pipes
Fittings
Mounting guidelines
Welding
Insulation
Service life
Pressure test
Chemical compatibility
Quality assurance
Boxing and shipping
Contacts

series
CLASSIC
CLASSIC-UV
POWER
POWER-PLUS
POWER-UV
FIBER-REINFORCED

series
CLASSIC-UV

SDR 6

Applications

POTABLE WATER APPLICATION
HEATING SYSTEM CONSTRUCTION
CONNECTION HEATING AND COOLING
CHILLED WATER TECHNOLOGY
AGRICOLTURE
SWIMMING-POOL TECHNOLOGY
CHEMICAL TRANSPORT
RRAINWATER APPLICATION
DISTRICT HEATING PIPELINE SYSTEM

Material: PPR-PPR-UV
Type: S 2,5
Color: green
Supply: bars of 4 meters
Standards: UNI EN ISO 15874-2
DIN 8077
DIN 8078

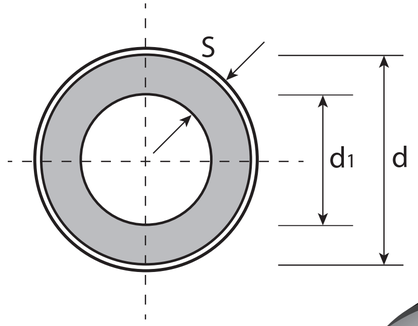

Cod	d	d_1	S	Kg/m	PN	SDR
TUBN2020	20	13,2	3,4	0,201	20	6
TUBN2025	25	16,6	4,2	0,302	20	6
TUBN2032	32	21,2	5,4	0,479	20	6
TUBN2040	40	26,6	6,7	0,728	20	6
TUBN2050	50	33,4	8,3	1,112	20	6
TUBN2063	63	42,0	10,5	1,775	20	6
TUBN2075	75	50,0	12,5	2,490	20	6
TUBN2090	90	60,0	15,0	3,516	20	6

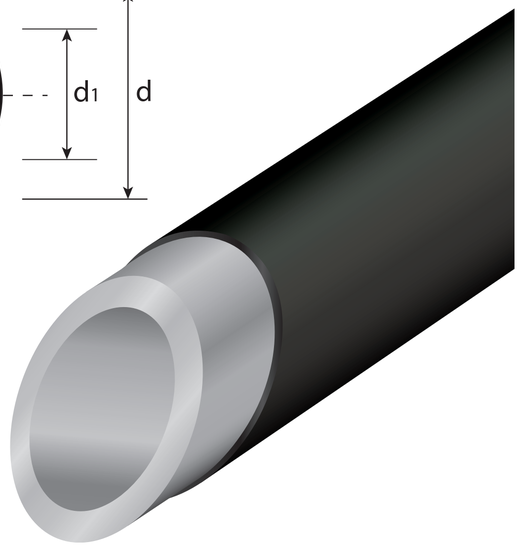

Mission
Quality policy
Raw material
Product range
Application areas
Pipes
Fittings
Mounting guidelines
Welding
Insulation
Service life
Pressure test
Chemical compatibility
Quality assurance
Boxing and shipping
Contacts

series
CLASSIC
CLASSIC-UV
POWER
POWER-PLUS
POWER-UV
FIBER-REINFORCED

series
POWER

SDR 7,4

Applications

POTABLE WATER APPLICATION
HEATING SYSTEM CONSTRUCTION
CONNECTION HEATING AND COOLING
CHILLED WATER TECHNOLOGY
AGRICOLTURE
SWIMMING-POOL TECHNOLOGY
CHEMICAL TRANSPORT
RRAINWATER APPLICATION
DISTRICT HEATING PIPELINE SYSTEM

Material: PPR-CT
Type: S 3,2
Color: green
Supply: bars of 4 meters
Standards: UNI EN ISO 15874-2
DIN 8077
DIN 8078

Cod	d	d_1	S	Kg/m	SDR
TRCT2025	25	18,0	3,5	0,230	7,4
TRCT2032	32	23,2	4,4	0,370	7,4
TRCT2040	40	29,0	5,5	0,575	7,4
TRCT2050	50	36,2	6,9	0,896	7,4
TRCT2063	63	45,8	8,6	1,410	7,4
TRCT2075	75	54,4	10,3	2,010	7,4
TRCT2090	90	65,4	12,3	2,870	7,4
TRCT20110	110	79,8	15,1	4,355	7,4

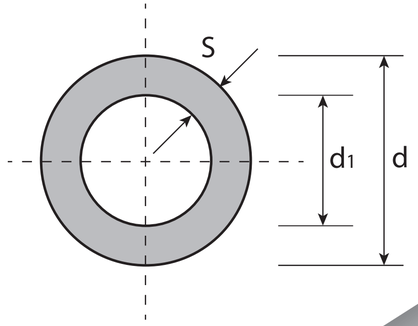

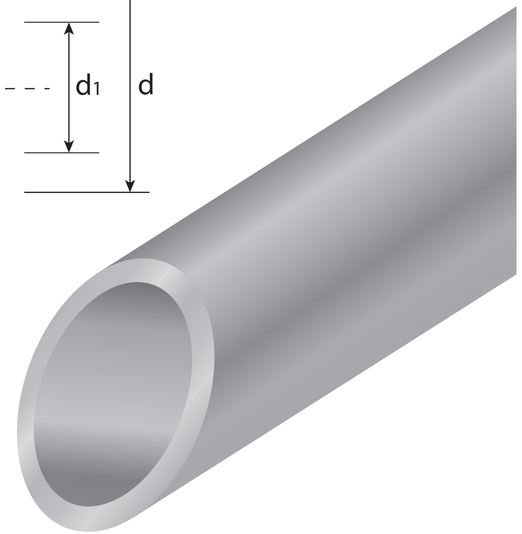

Mission
Quality policy
Raw material
Product range
Application areas
Pipes
Fittings
Mounting guidelines
Welding
Insulation
Service life
Pressure test
Chemical compatibility
Quality assurance
Boxing and shipping
Contacts

series
CLASSIC
CLASSIC-UV
POWER
POWER-PLUS
POWER-UV
FIBER-REINFORCED

series
POWER-PLUS

SDR 7,4

Applications

POTABLE WATER APPLICATION
HEATING SYSTEM CONSTRUCTION
CONNECTION HEATING AND COOLING
CHILLED WATER TECHNOLOGY
AGRICOLTURE
SWIMMING-POOL TECHNOLOGY
CHEMICAL TRANSPORT
RRAINWATER APPLICATION
DISTRICT HEATING PIPELINE SYSTEM

Material: PP-RCT
PP-RCT PLUS
Type: S 3,2
Color: green
Supply: bars of 4 meters
Standards: UNI EN ISO 15874-2
DIN 8077
DIN 8078

Cod	d	d_1	S	Kg/m	SDR
DBC2020	20	18,0	2,8	0,148	7,4
DBC2025	25	23,2	3,5	0,230	7,4
DBC2032	32	29,0	4,4	0,370	7,4
DBC2040	40	36,2	5,5	0,575	7,4
DBC2050	50	45,8	6,9	0,896	7,4
DBC2063	63	54,4	8,6	1,410	7,4

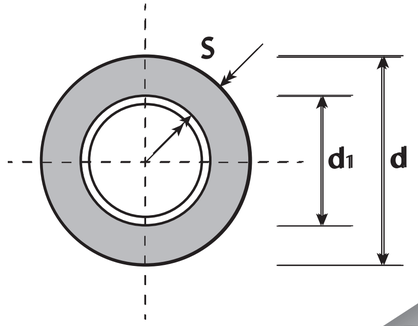

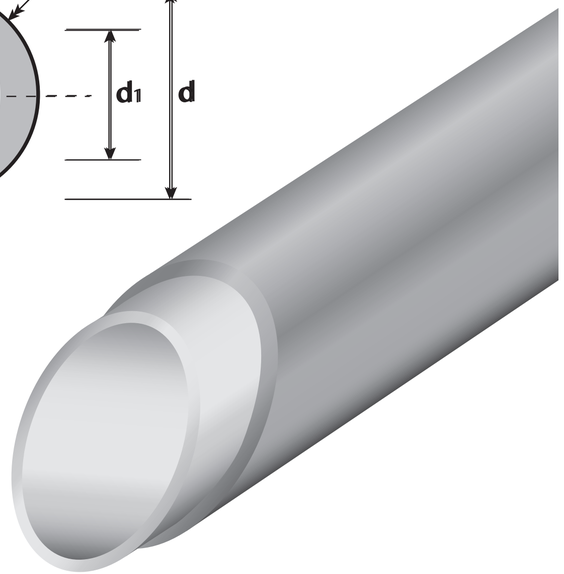

Mission
Quality policy
Raw material
Product range
Application areas
Pipes
Fittings
Mounting guidelines
Welding
Insulation
Service life
Pressure test
Chemical compatibility
Quality assurance
Boxing and shipping
Contacts

series
CLASSIC
CLASSIC-UV
POWER
POWER-PLUS
POWER-UV
FIBER-REINFORCED

series
POWER-UV

SDR 7,4

Material: PP-RCT+PP-RCTUV PE UV
Type: S 3,2
Color: green
Supply: bars of 4 meters
Standards: UNI EN ISO 15874-2
DIN 8077
DIN 8078

Applications

POTABLE WATER APPLICATION | HEATING SYSTEM CONSTRUCTION | CONNECTION HEATING AND COOLING | CHILLED WATER TECHNOLOGY | AGRICOLTURE | SWIMMING-POOL TECHNOLOGY | CHEMICAL TRANSPORT | RRAINWATER APPLICATION | DISTRICT HEATING PIPELINE SYSTEM

Cod	d	d_1	S	Kg/m	SDR
TRCN2025	25	18,0	3,5	0,280	7,4
TRCN2032	32	23,2	4,4	0,435	7,4
TRCN2040	40	29,0	5,5	0,656	7,4
TRCN2050	50	36,2	6,9	1,012	7,4
TRCN2063	63	45,8	8,6	1,556	7,4
TRCN2075	75	54,4	10,3	2,180	7,4
TRCN2090	90	65,4	12,3	3,020	7,4

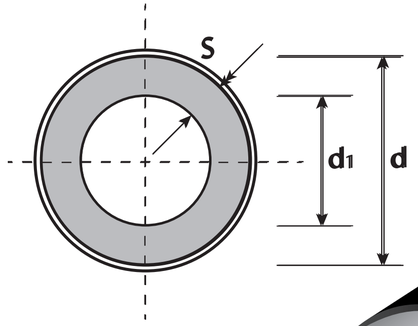

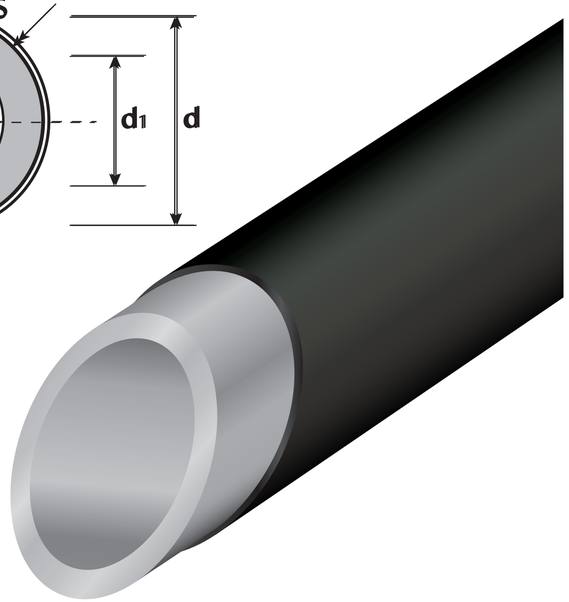

Mission
Quality policy
Raw material
Product range
Application areas
Pipes
Fittings
Mounting guidelines
Welding
Insulation
Service life
Pressure test
Chemical compatibility
Quality assurance
Boxing and shipping
Contacts

series
CLASSIC
CLASSIC-UV
POWER
POWER-PLUS
POWER-UV
FIBER-REINFORCED

series
FIBER REINFORCED

SDR 7,4

Applications

POTABLE WATER APPLICATION
HEATING SYSTEM CONSTRUCTION
CONNECTION HEATING AND COOLING
CHILLED WATER TECHNOLOGY
AGRICOLTURE
SWIMMING-POOL TECHNOLOGY
CHEMICAL TRANSPORT
RRAINWATER APPLICATION
DISTRICT HEATING PIPELINE SYSTEM

Material: PP-RCT FIBER PP-RCT
Type: S 3,2
Color: green
Supply: bars of 4 meters
Standards: UNI EN ISO 15874-2 DIN 8077 DIN 8078

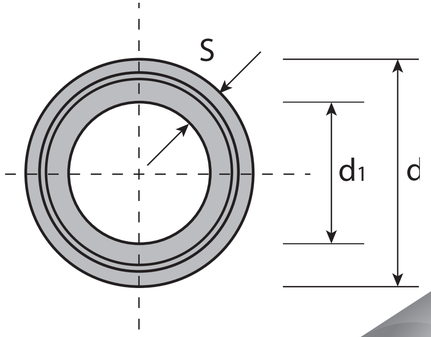

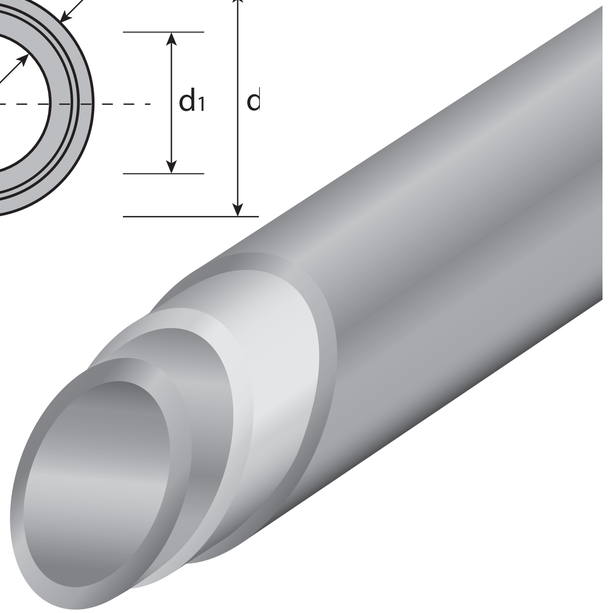

Cod	d	d_1	S	Kg/m	SDR
TFG2020	20	14,4	2,8	0,154	7,4
TFG2025	25	18,0	3,5	0,238	7,4
TFG2032	32	23,2	4,4	0,382	7,4
TFG2040	40	29,0	5,5	0,597	7,4
TFG2050	50	36,2	6,9	0,935	7,4
TFG2063	63	45,8	8,6	1,450	7,4
TFG2075	75	54,4	10,3	2,140	7,4
TFG2090	90	65,4	12,3	3,070	7,4
TFG20110	110	45,8	15,1	4,550	7,4

Mission
Quality policy
Raw material
Product range
Application areas
Pipes
Fittings
Mounting guidelines
Welding
Insulation
Service life
Pressure test
Chemical compatibility
Quality assurance
Boxing and shipping
Contacts

90° plain elbow
M/F 90° plain elbow
45° plain elbow
Sleeve
90° plain Tee
Plain cap
M/F Plain reduction
90° plain reduced tee
By-pass
By-pass with coupling
Male threaded joint
Female threaded joint
Female threaded elbow
Female threaded elbow with brackets
Male threaded elbow
Female threaded tee
Male threaded tee
Double female threaded tee
Monocontrol mix shower
Tap with chrome cap PP/SEAT
Tap with chrome handle PP/SEAT
Valve with extractable ball
Standard Alignment Module
Complex Alignment Module

Fittings

Applications

Assembly Compatibility

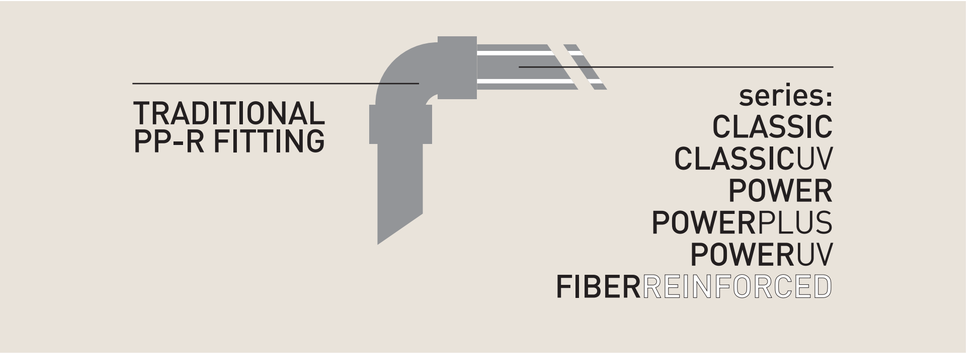

Colors

Mission
Quality policy
Raw material
Product range
Application areas
Pipes
Fittings
Mounting guidelines
Welding
Insulation
Service life
Pressure test
Chemical compatibility
Quality assurance
Boxing and shipping
Contacts

90° plain elbow
M/F 90° plain elbow
45° plain elbow
Sleeve
90° plain Tee
Plain cap
M/F Plain reduction
90° plain reduced tee
By-pass
By-pass with coupling
Male threaded joint
Female threaded joint
Female threaded elbow
Female threaded elbow with brackets
Male threaded elbow
Female threaded tee
Male threaded tee
Double female threaded tee
Monocontrol mix shower
Tap with chrome cap PP/SEAT
Tap with chrome handle PP/SEAT
Valve with extractable ball
Standard Alignment Module
Complex Alignment Module

90° plain elbow

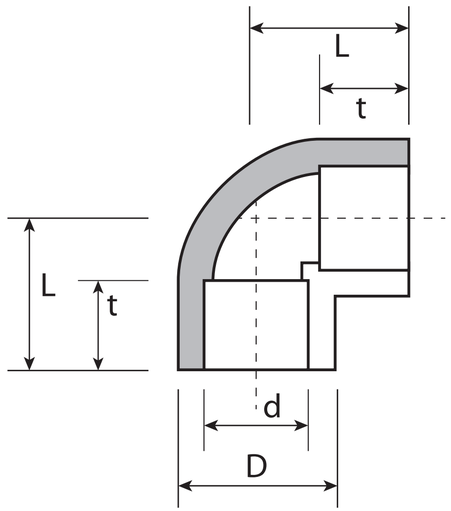

Code	Φ	d	D	L	t
601020	20	19,3	30	27	14,5
601025	25	24,3	34	31	16,0
601032	32	31,3	41	36	18,0
601040	40	39,2	54	42	20,5
601050	50	49,2	66	50	23,5
601063	63	62,1	83	60	27,5
601075	75	74,1	99	69	30
601090	90	89,2	120	80	33
6010110	110	109,2	146	95	37

Mission
Quality policy
Raw material
Product range
Application areas
Pipes
Fittings
Mounting guidelines
Welding
Insulation
Service life
Pressure test
Chemical compatibility
Quality assurance
Boxing and shipping
Contacts

90° plain elbow
M/F 90° plain elbow
45° plain elbow
Sleeve
90° plain Tee
Plain cap
M/F Plain reduction
90° plain reduced tee
By-pass
By-pass with coupling
Male threaded joint
Female threaded joint
Female threaded elbow
Female threaded elbow with brackets
Male threaded elbow
Female threaded tee
Male threaded tee
Double female threaded tee
Monocontrol mix shower
Tap with chrome cap PP/SEAT
Tap with chrome handle PP/SEAT
Valve with extractable ball
Standard Alignment Module
Complex Alignment Module

M/F 90° plain elbow

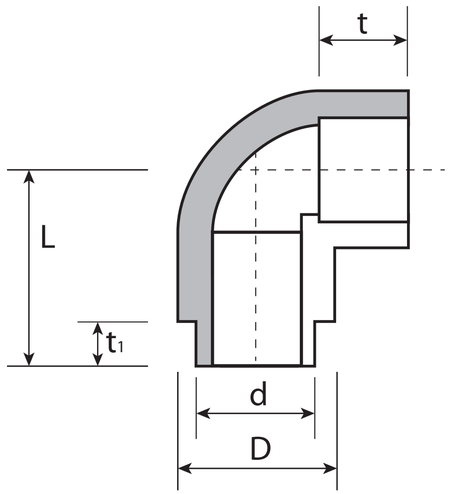

Code	Φ	d	D	L	t	t[1]
602020	20	20,1	29	30	14,5	14
602025	25	25,1	36	35	16	15
602032	32	32,1	44	41	18	18

Mission
Quality policy
Raw material
Product range
Application areas
Pipes
Fittings
Mounting guidelines
Welding
Insulation
Service life
Pressure test
Chemical compatibility
Quality assurance
Boxing and shipping
Contacts

90° plain elbow
M/F 90° plain elbow
45° plain elbow
Sleeve
90° plain Tee
Plain cap
M/F Plain reduction
90° plain reduced tee
By-pass
By-pass with coupling
Male threaded joint
Female threaded joint
Female threaded elbow
Female threaded elbow with brackets
Male threaded elbow
Female threaded tee
Male threaded tee
Double female threaded tee
Monocontrol mix shower
Tap with chrome cap PP/SEAT
Tap with chrome handle PP/SEAT
Valve with extractable ball
Standard Alignment Module
Complex Alignment Module

45° plain elbow

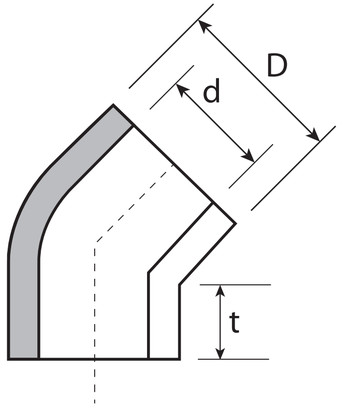

Code	Φ	d	D	t
603020	20	19,3	29,0	14,5
603025	25	24,3	33,5	18,0
603032	32	31,3	41,5	22,0
603040	40	39,2	55,0	20,5
603050	50	49,2	69,0	22,0
603063	63	62,1	87,0	26,0
603075	75	74,1	100	30
603090	90	89,2	120	35
6030110	110	109,2	146	37

Mission
Quality policy
Raw material
Product range
Application areas
Pipes
Fittings
Mounting guidelines
Welding
Insulation
Service life
Pressure test
Chemical compatibility
Quality assurance
Boxing and shipping
Contacts

90° plain elbow
M/F 90° plain elbow
45° plain elbow
Sleeve
90° plain Tee
Plain cap
M/F Plain reduction
90° plain reduced tee
By-pass
By-pass with coupling
Male threaded joint
Female threaded joint
Female threaded elbow
Female threaded elbow with brackets
Male threaded elbow
Female threaded tee
Male threaded tee
Double female threaded tee
Monocontrol mix shower
Tap with chrome cap PP/SEAT
Tap with chrome handle PP/SEAT
Valve with extractable ball
Standard Alignment Module
Complex Alignment Module

Sleeve

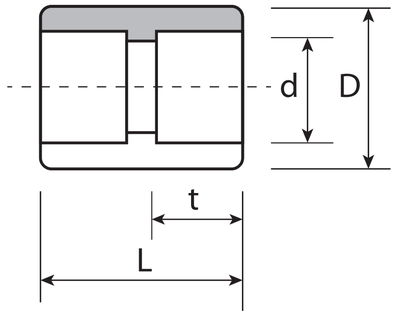

Code	Φ	d	D	L	t
604020	20	19,3	29	35	14,5
604025	25	24,3	34	35	16,0
604032	32	31,3	42	43	18,0
604040	40	39,2	54	48	20,5
604050	50	49,2	64	51	23,5
604063	63	62,1	84	59	41,0
604075	75	74,1	100	68	30
604090	90	89,2	120	80	33
6040110	110	109,2	146	86	37

Mission
Quality policy
Raw material
Product range
Application areas
Pipes
Fittings
Mounting guidelines
Welding
Insulation
Service life
Pressure test
Chemical compatibility
Quality assurance
Boxing and shipping
Contacts

90° plain elbow
M/F 90° plain elbow
45° plain elbow
Sleeve
90° plain Tee
Plain cap
M/F Plain reduction
90° plain reduced tee
By-pass
By-pass with coupling
Male threaded joint
Female threaded joint
Female threaded elbow
Female threaded elbow with brackets
Male threaded elbow
Female threaded tee
Male threaded tee
Double female threaded tee
Monocontrol mix shower
Tap with chrome cap PP/SEAT
Tap with chrome handle PP/SEAT
Valve with extractable ball
Standard Alignment Module
Complex Alignment Module

90° plain Tee

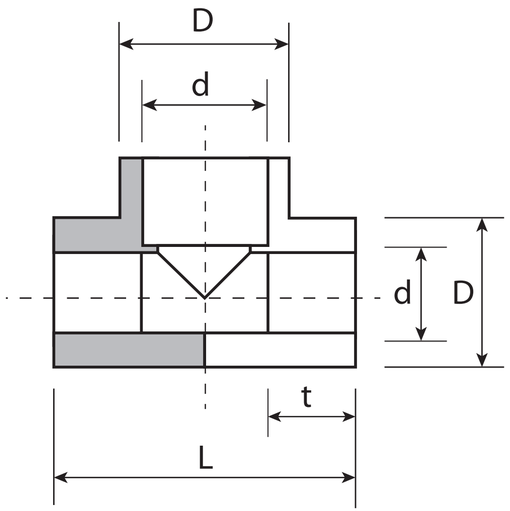

Code	Φ	d	D	L	t
605020	20	19,3	30	54	14,5
605025	25	24,3	34	64	16,0
605032	32	31,3	41	75	18,0
605040	40	39,2	54	86	20,5
605050	50	49,2	65	98	23,5
605063	63	62,1	83	117	27,5
605075	75	74,1	100	139	30
605090	90	89,2	120	170	33
6050110	110	109,2	146	188	37

Mission
Quality policy
Raw material
Product range
Application areas
Pipes
Fittings
Mounting guidelines
Welding
Insulation
Service life
Pressure test
Chemical compatibility
Quality assurance
Boxing and shipping
Contacts

90° plain elbow
M/F 90° plain elbow
45° plain elbow
Sleeve
90° plain Tee
Plain cap
M/F Plain reduction
90° plain reduced tee
By-pass
By-pass with coupling
Male threaded joint
Female threaded joint
Female threaded elbow
Female threaded elbow with brackets
Male threaded elbow
Female threaded tee
Male threaded tee
Double female threaded tee
Monocontrol mix shower
Tap with chrome cap PP/SEAT
Tap with chrome handle PP/SEAT
Valve with extractable ball
Standard Alignment Module
Complex Alignment Module

Plain cap

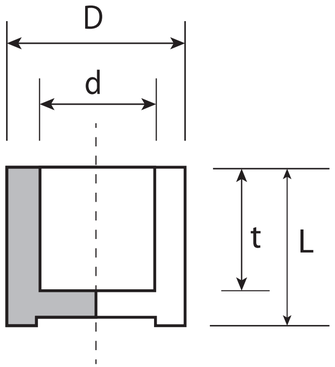

Code	Φ	d	D	L	t
606020	20	19,1	30	22	14,5
606025	25	24,1	34	23	16
606032	32	31,1	41	35	16
606040	40	39,2	54	35	18
606050	50	49,2	63	34	18
606063	63	62,1	84	40	18
606075	75	74,1	100	57	30
606090	90	89,2	120	63	33
6060110	110	109,2	146	85	37

Mission
Quality policy
Raw material
Product range
Application areas
Pipes
Fittings
Mounting guidelines
Welding
Insulation
Service life
Pressure test
Chemical compatibility
Quality assurance
Boxing and shipping
Contacts

90° plain elbow
M/F 90° plain elbow
45° plain elbow
Sleeve
90° plain Tee
Plain cap
M/F Plain reduction
90° plain reduced tee
By-pass
By-pass with coupling
Male threaded joint
Female threaded joint
Female threaded elbow
Female threaded elbow with brackets
Male threaded elbow
Female threaded tee
Male threaded tee
Double female threaded tee
Monocontrol mix shower
Tap with chrome cap PP/SEAT
Tap with chrome handle PP/SEAT
Valve with extractable ball
Standard Alignment Module
Complex Alignment Module

M/F Plain reduction

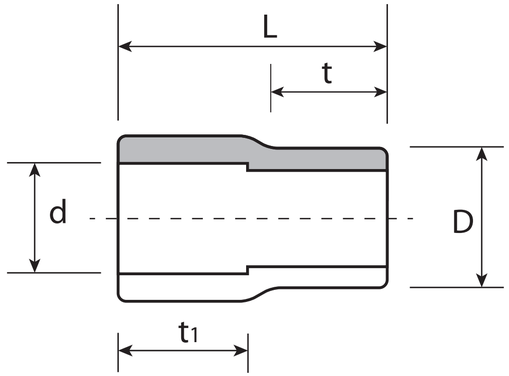

Code	Φ	d	D	t	t¹	L
607015	25x20	19,3	25	14,5	15	31,5
607020	32x20	19,3	32	20,0	21,6	42
607025	32x25	24,2	32	20,0	21,6	42
607030	40x20	19,3	40	23,5	25,2	19
607035	40x25	24,2	40	23,5	25,5	49
607040	40x32	31,2	40	25,5	26	51,3
607043	50x20	19,3	50	15,0	21,7	38,5
607044	50x25	24,2	50	16,5	21,7	38,5
607045	50x32	31,2	50	12,6	21,7	35
607050	50x40	39,2	50	19,6	25	44,5
607052	63x20	19,3	63	15,2	25	40
607053	63x25	24,2	63	15,2	25	40
607054	63x32	31,2	63	15,2	25	41
607055	63x40	39,2	63	18,7	25	43,7
607060	63x50	49,1	63	24,7	27	49,7
607065	75x40	39,2	75	30,0	23,5	58
607070	75x50	49,1	75	30,0	23,5	58
607075	75x63	62,2	75	30,0	27,5	58
607085	90x50	49,1	90	33,0	23,5	60
607087	90x63	62,2	90	33,0	27,5	60
607090	90x75	74,2	90	33,0	30,0	60
607095	110x63	62,2	110	37,0	27,5	66
607096	110x75	74,2	110	37,0	30,0	66
607098	110x90	89,1	110	37,0	30,0	66

Mission
Quality policy
Raw material
Product range
Application areas
Pipes
Fittings
Mounting guidelines
Welding
Insulation
Service life
Pressure test
Chemical compatibility
Quality assurance
Boxing and shipping
Contacts

90° plain elbow
M/F 90° plain elbow
45° plain elbow
Sleeve
90° plain Tee
Plain cap
M/F Plain reduction
90° plain reduced tee
By-pass
By-pass with coupling
Male threaded joint
Female threaded joint
Female threaded elbow
Female threaded elbow with brackets
Male threaded elbow
Female threaded tee
Male threaded tee
Double female threaded tee
Monocontrol mix shower
Tap with chrome cap PP/SEAT
Tap with chrome handle PP/SEAT
Valve with extractable ball
Standard Alignment Module
Complex Alignment Module

90° plain reduced tee

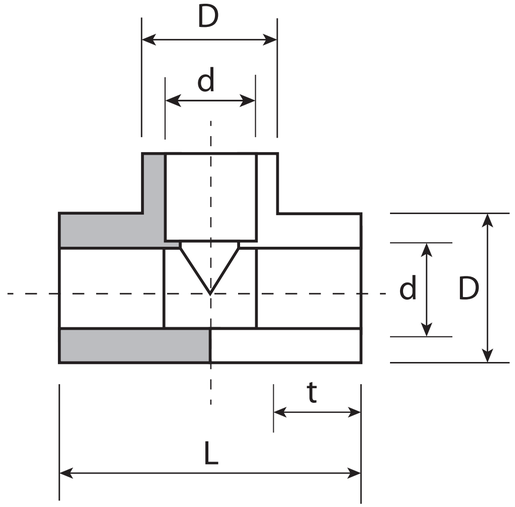

Code	Φ	d	D	d[1]	D[1]	t	L
608005	25x20x25	19,3	34	24.1	34	16,0	64
608010	32x20x32	19,3	41	31,2	41	18,0	75
608015	32x25x32	24,2	41	31,2	41	18,0	75
608018	40x20x40	19,3	54	39,2	54	20,5	86
608019	40x25x40	24,2	54	39,2	54	20,5	86
608020	40x32x40	31,2	54	39,2	54	20,5	86
608023	50x25x50	24,2	65	49,1	65	23,5	98
608024	50x32x50	31,2	65	49,1	65	23,5	98
608025	50x40x50	39,2	65	49,1	65	23,5	98
608029	63x25x63	24,2	44	62,1	88	27,5	84
608030	63x32x63	31,2	44	62,1	88	27,5	84
608035	63x40x63	39,2	83	62,1	83	27,5	117
608040	63x50x63	49,1	83	62,1	83	27,5	117
608055	75x40x75	39,2	51	74,1	100	30,0	139
608057	75x50x75	49,1	70	74,1	100	30,0	139
608063	75x63x75	62,2	85	74,1	100	30,0	139
608091	90x50x90	49,1	70	89,2	122	33,0	170
608093	90x63x90	62,2	85	89,2	122	33,0	170
608094	90x75x90	74,1	100	89,2	122	33,0	170
608095	110x63x110	62,2	85	109,2	147	37,0	188
608096	110x75x110	74,2	100	109,2	147	37,0	188
608098	110x90x110	89,2	120	109,2	147	37,0	188

Mission
Quality policy
Raw material
Product range
Application areas
Pipes
Fittings
Mounting guidelines
Welding
Insulation
Service life
Pressure test
Chemical compatibility
Quality assurance
Boxing and shipping
Contacts

90° plain elbow
M/F 90° plain elbow
45° plain elbow
Sleeve
90° plain Tee
Plain cap
M/F Plain reduction
90° plain reduced tee
By-pass
By-pass with coupling
Male threaded joint
Female threaded joint
Female threaded elbow
Female threaded elbow with brackets
Male threaded elbow
Female threaded tee
Male threaded tee
Double female threaded tee
Monocontrol mix shower
Tap with chrome cap PP/SEAT
Tap with chrome handle PP/SEAT
Valve with extractable ball
Standard Alignment Module
Complex Alignment Module

By-pass

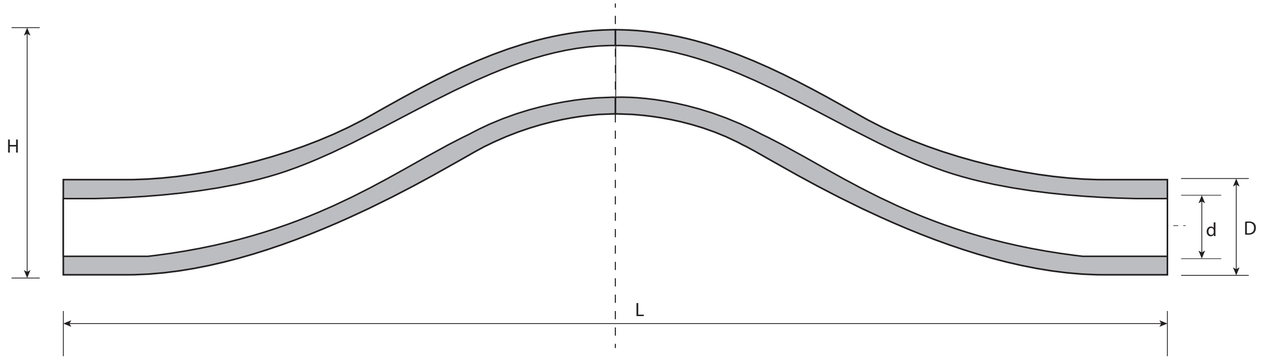

Code	Φ	d	D	H	L
609020	20	13,2	20,1	50	33
609025	25	16,6	25,1	56	33
609032	32	21,2	32,1	63	33

Mission
Quality policy
Raw material
Product range
Application areas
Pipes
Fittings
Mounting guidelines
Welding
Insulation
Service life
Pressure test
Chemical compatibility
Quality assurance
Boxing and shipping
Contacts

90° plain elbow
M/F 90° plain elbow
45° plain elbow
Sleeve
90° plain Tee
Plain cap
M/F Plain reduction
90° plain reduced tee
By-pass
By-pass with coupling
Male threaded joint
Female threaded joint
Female threaded elbow
Female threaded elbow with brackets
Male threaded elbow
Female threaded tee
Male threaded tee
Double female threaded tee
Monocontrol mix shower
Tap with chrome cap PP/SEAT
Tap with chrome handle PP/SEAT
Valve with extractable ball
Standard Alignment Module
Complex Alignment Module

By-pass with coupling

Code	Φ	A	B	C	C_1	d	L	L_1	L_2	S	S_1
609220	20	21	11	27,8	42,3	19,3	100	15,5	17	4,6	5,0
609225	25	26	15	35,0	52,7	24,3	118,5	17,5	20,5	5,2	5,7
609232	32	37	18	44	67	31,1	117	18	23	6,5	7

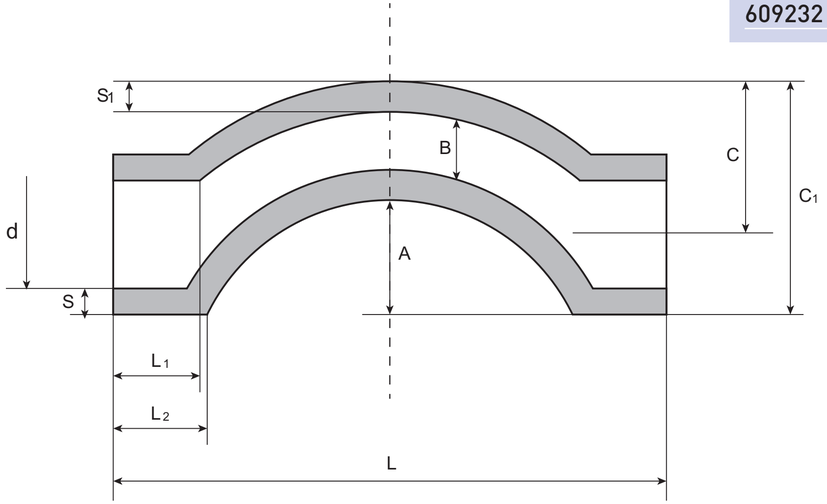

Mission
Quality policy
Raw material
Product range
Application areas
Pipes
Fittings
Mounting guidelines
Welding
Insulation
Service life
Pressure test
Chemical compatibility
Quality assurance
Boxing and shipping
Contacts

90° plain elbow
M/F 90° plain elbow
45° plain elbow
Sleeve
90° plain Tee
Plain cap
M/F Plain reduction
90° plain reduced tee
By-pass
By-pass with coupling
Male threaded joint
Female threaded joint
Female threaded elbow
Female threaded elbow with brackets
Male threaded elbow
Female threaded tee
Male threaded tee
Double female threaded tee
Monocontrol mix shower
Tap with chrome cap PP/SEAT
Tap with chrome handle PP/SEAT
Valve with extractable ball
Standard Alignment Module
Complex Alignment Module

Male threaded joint

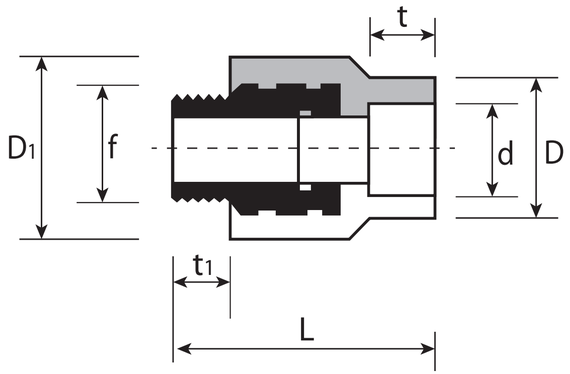

Code	Φ	d	f	D	D¹	t	L	t¹
701020	20x½	19,1	1/2"	34	37	14	55	15
701024	25x½	24,1	1/2"	38	40	14	55	15
701025	25x¾	24,1	3/4"	38	40	14	56	16
701031	32x¾	31,1	1/2"	47	49,6	17	63,6	16
701032	32x1	31,1	1"	47	49,6	17	63,6	18,5
701040	40x1 ¼	39,3	1 ¼	58	65	25,5	95,6	33
701050	50x1 ½	49,3	1 ½	64	73,7	25,5	96	38,7
701063	63x2	62,2	2"	84	97,7	28,6	99	34,5
701075	75x2 ½	74,1	2 ½	100	120	30	105	38
701090	90x3	89,2	3	120	134	33	133	48
7010110	110x4	109,2	4	144	160	37	152	55

Mission
Quality policy
Raw material
Product range
Application areas
Pipes
Fittings
Mounting guidelines
Welding
Insulation
Service life
Pressure test
Chemical compatibility
Quality assurance
Boxing and shipping
Contacts

90° plain elbow
M/F 90° plain elbow
45° plain elbow
Sleeve
90° plain Tee
Plain cap
M/F Plain reduction
90° plain reduced tee
By-pass
By-pass with coupling
Male threaded joint
Female threaded joint
Female threaded elbow
Female threaded elbow with brackets
Male threaded elbow
Female threaded tee
Male threaded tee
Double female threaded tee
Monocontrol mix shower
Tap with chrome cap PP/SEAT
Tap with chrome handle PP/SEAT
Valve with extractable ball
Standard Alignment Module
Complex Alignment Module

Female threaded joint

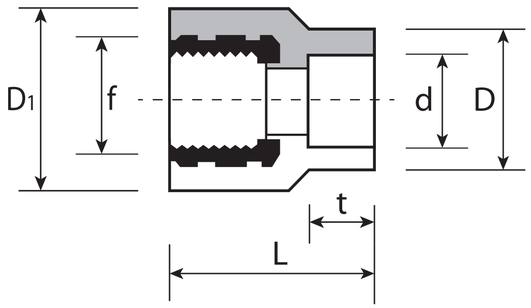

Code	Φ	d	f	D	D1	t	L
702020	20x½	19,1	1/2"	34	37	14	40
702024	25x½	24,1	1/2"	38	40	14	40
702025	25x¾	24,1	3/4"	38	40	14	40
702031	32x¾	31,1	1/2"	47	49,6	17	45
702032	32x1	31,1	1"	47	49,6	17	45
702040	40x1 ¼	39,3	1 ¼	58	65	25,5	78
702050	50x1 ½	49,3	1 ½	64	73,7	25,5	75
702063	63x2	62,2	2"	84	97,7	28,6	85.7
702075	75x2 ½	74,1	2 ½	100	120	30	81
702090	90x3	89,2	3	120	134	33	107
7020110	110x4	109,2	4	146	160	37	133

Mission
Quality policy
Raw material
Product range
Application areas
Pipes
Fittings
Mounting guidelines
Welding
Insulation
Service life
Pressure test
Chemical compatibility
Quality assurance
Boxing and shipping
Contacts

90° plain elbow
M/F 90° plain elbow
45° plain elbow
Sleeve
90° plain Tee
Plain cap
M/F Plain reduction
90° plain reduced tee
By-pass
By-pass with coupling
Male threaded joint
Female threaded joint
Female threaded elbow
Female threaded elbow with brackets
Male threaded elbow
Female threaded tee
Male threaded tee
Double female threaded tee
Monocontrol mix shower
Tap with chrome cap PP/SEAT
Tap with chrome handle PP/SEAT
Valve with extractable ball
Standard Alignment Module
Complex Alignment Module

Female threaded elbow

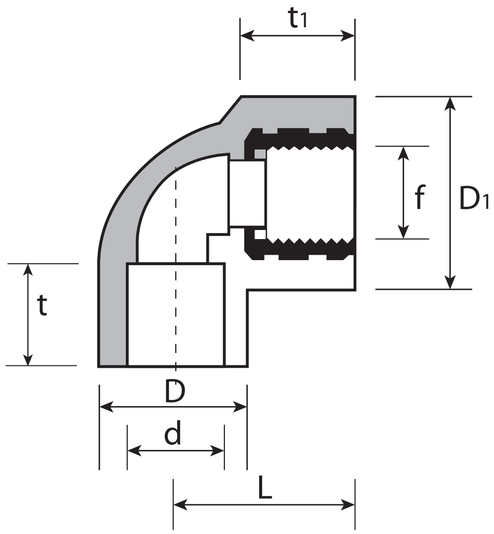

Code	Φ	d	f	D	D1	t	L	t1
703020	20x½	19,1	1/2"	30	39	14,5	35	22
703024	25x½	24,1	1/2"	36	41	16,0	38	27
703025	25x¾	24,1	3/4"	36	41	16,0	38	27
703031	32x¾	32,1	1"	42,5	51	18,0	42,5	29
703032	32x1	32,1	1"	42,5	51	18,0	42,5	29
703040	40x¼	40,1	1"¼	53	51	21	68,5	41
703050	50x1½	50,1	1"½	65,5	72	21,5	75	39
703063	63x2	63,1	2"	84,5	85	24,8	82,5	51

Mission
Quality policy
Raw material
Product range
Application areas
Pipes
Fittings
Mounting guidelines
Welding
Insulation
Service life
Pressure test
Chemical compatibility
Quality assurance
Boxing and shipping
Contacts

90° plain elbow
M/F 90° plain elbow
45° plain elbow
Sleeve
90° plain Tee
Plain cap
M/F Plain reduction
90° plain reduced tee
By-pass
By-pass with coupling
Male threaded joint
Female threaded joint
Female threaded elbow
Female threaded elbow with brackets
Male threaded elbow
Female threaded tee
Male threaded tee
Double female threaded tee
Monocontrol mix shower
Tap with chrome cap PP/SEAT
Tap with chrome handle PP/SEAT
Valve with extractable ball
Standard Alignment Module
Complex Alignment Module

Female threaded elbow with brackets

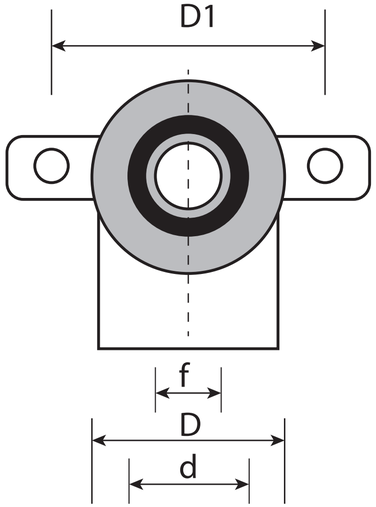

Code	Φ	d	f	D	D[1]
705020	20	19,3	1/2"	29	40

Mission
Quality policy
Raw material
Product range
Application areas
Pipes
Fittings
Mounting guidelines
Welding
Insulation
Service life
Pressure test
Chemical compatibility
Quality assurance
Boxing and shipping
Contacts

90° plain elbow
M/F 90° plain elbow
45° plain elbow
Sleeve
90° plain Tee
Plain cap
M/F Plain reduction
90° plain reduced tee
By-pass
By-pass with coupling
Male threaded joint
Female threaded joint
Female threaded elbow
Female threaded elbow with brackets
Male threaded elbow
Female threaded tee
Male threaded tee
Double female threaded tee
Monocontrol mix shower
Tap with chrome cap PP/SEAT
Tap with chrome handle PP/SEAT
Valve with extractable ball
Standard Alignment Module
Complex Alignment Module

Male threaded elbow

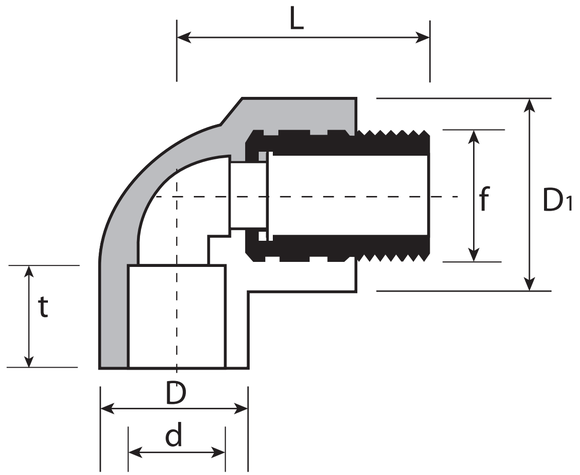

Code	Φ	d	f	D	D[1]	t	L
707020	20x½	19,1	1/2"	30	39	14,5	50
707024	25x½	24,1	1/2"	36	41	16,0	53
707025	25x¾	24,1	3/4"	36	41	16,0	54
707032	32x1	32,1	1"	42,5	51	18,0	61

Mission
Quality policy
Raw material
Product range
Application areas
Pipes
Fittings
Mounting guidelines
Welding
Insulation
Service life
Pressure test
Chemical compatibility
Quality assurance
Boxing and shipping
Contacts

90° plain elbow
M/F 90° plain elbow
45° plain elbow
Sleeve
90° plain Tee
Plain cap
M/F Plain reduction
90° plain reduced tee
By-pass
By-pass with coupling
Male threaded joint
Female threaded joint
Female threaded elbow
Female threaded elbow with brackets
Male threaded elbow
Female threaded tee
Male threaded tee
Double female threaded tee
Monocontrol mix shower
Tap with chrome cap PP/SEAT
Tap with chrome handle PP/SEAT
Valve with extractable ball
Standard Alignment Module
Complex Alignment Module

Female threaded tee

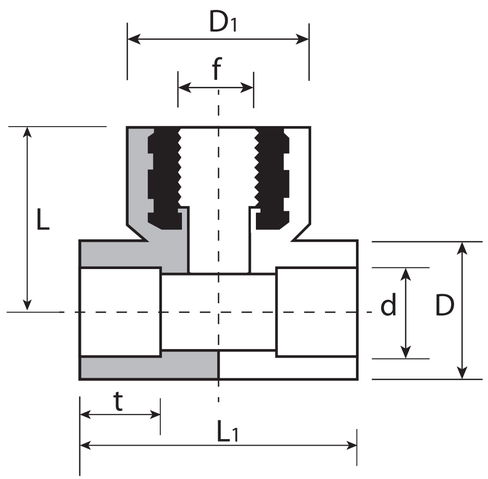

Code	Φ	d	f	D	D1	t	L	t1
708020	20x½	19,1	1/2"	29	38	14,5	54,2	26,7
708024	25x½	24,1	1/2"	33,7	43	16,0	62,6	21,7
708025	25x¾	24,1	3/4"	33,7	43	16,0	62,6	21,7
708031	32x¾	32,1	3/4"	42,4	51	18,0	74	22
708032	32x1	32,1	1"	42,4	51	18,0	74	22
708037	40x¾	39,2	3/4"	53	42,4	20	44	75,5
708047	50x¾	49,1	3/4"	70	43	27	80	18
708060	63x¾	62,1	3/4"	88	44	29	84	16

Mission
Quality policy
Raw material
Product range
Application areas
Pipes
Fittings
Mounting guidelines
Welding
Insulation
Service life
Pressure test
Chemical compatibility
Quality assurance
Boxing and shipping
Contacts

90° plain elbow
M/F 90° plain elbow
45° plain elbow
Sleeve
90° plain Tee
Plain cap
M/F Plain reduction
90° plain reduced tee
By-pass
By-pass with coupling
Male threaded joint
Female threaded joint
Female threaded elbow
Female threaded elbow with brackets
Male threaded elbow
Female threaded tee
Male threaded tee
Double female threaded tee
Monocontrol mix shower
Tap with chrome cap PP/SEAT
Tap with chrome handle PP/SEAT
Valve with extractable ball
Standard Alignment Module
Complex Alignment Module

Male threaded tee

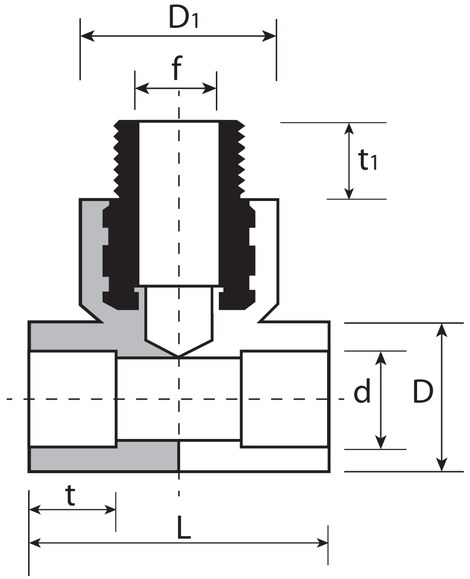

Code	Φ	d	f	D	D1	t	L	t1
709020	20x½	19,1	1/2"	29	38	14,5	54,2	41,7
709024	25x½	24,1	1/2"	33,7	43	16,0	62,6	36,7
709025	25x¾	24,1	3/4"	33,7	43	16,0	62,6	38,7
709032	32x1	31,1	1"	42,4	51	18,0	74	40,6

Mission
Quality policy
Raw material
Product range
Application areas
Pipes
Fittings
Mounting guidelines
Welding
Insulation
Service life
Pressure test
Chemical compatibility
Quality assurance
Boxing and shipping
Contacts

90° plain elbow
M/F 90° plain elbow
45° plain elbow
Sleeve
90° plain Tee
Plain cap
M/F Plain reduction
90° plain reduced tee
By-pass
By-pass with coupling
Male threaded joint
Female threaded joint
Female threaded elbow
Female threaded elbow with brackets
Male threaded elbow
Female threaded tee
Male threaded tee
Double female threaded tee
Monocontrol mix shower
Tap with chrome cap PP/SEAT
Tap with chrome handle PP/SEAT
Valve with extractable ball
Standard Alignment Module
Complex Alignment Module

Double female threaded tee

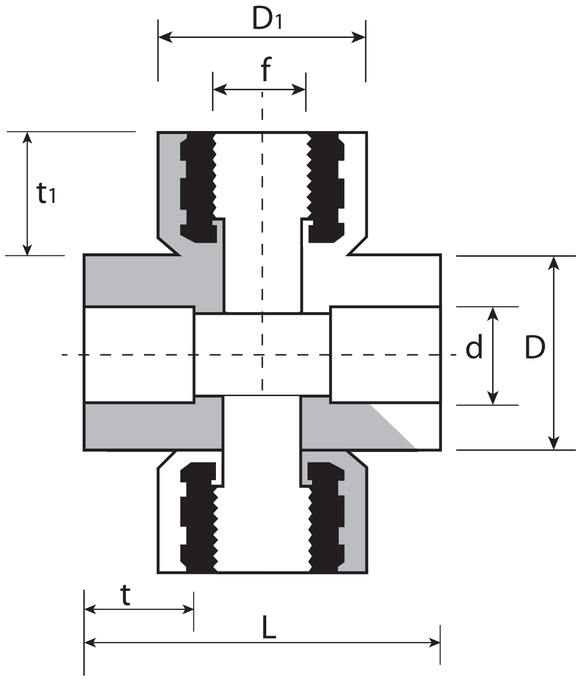

Code	Φ	d	f	D	D¹	t	L	t¹
708537	¾x40x¾	39,1	3/4"	53	43	26	76	17
708547	¾x50x¾	49,1	3/4"	70	43	27	80	18
708560	¾x63x¾	62,1	3/4"	88	44	29	84	16

Mission
Quality policy
Raw material
Product range
Application areas
Pipes
Fittings
Mounting guidelines
Welding
Insulation
Service life
Pressure test
Chemical compatibility
Quality assurance
Boxing and shipping
Contacts

90° plain elbow
M/F 90° plain elbow
45° plain elbow
Sleeve
90° plain Tee
Plain cap
M/F Plain reduction
90° plain reduced tee
By-pass
By-pass with coupling
Male threaded joint
Female threaded joint
Female threaded elbow
Female threaded elbow with brackets
Male threaded elbow
Female threaded tee
Male threaded tee
Double female threaded tee
Monocontrol mix shower
Tap with chrome cap PP/SEAT
Tap with chrome handle PP/SEAT
Valve with extractable ball
Standard Alignment Module
Complex Alignment Module

Monocontrol mix shower

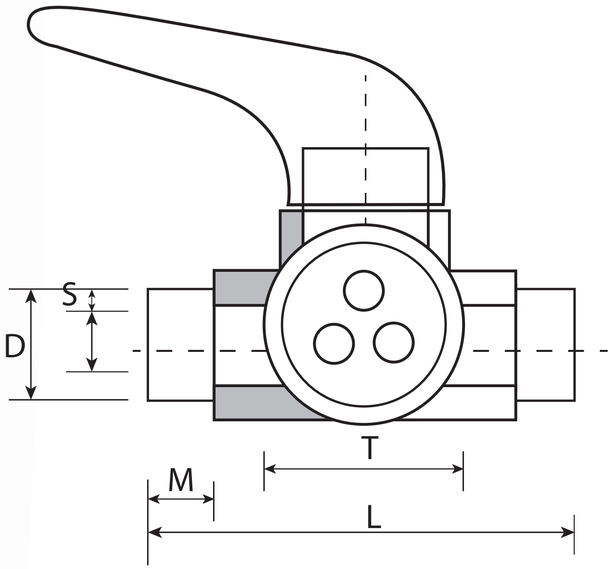

Code	Φ	d	D	L	M	S	T
852020	20	19	29	100	15,7	5	50

Mission
Quality policy
Raw material
Product range
Application areas
Pipes
Fittings
Mounting guidelines
Welding
Insulation
Service life
Pressure test
Chemical compatibility
Quality assurance
Boxing and shipping
Contacts

90° plain elbow
M/F 90° plain elbow
45° plain elbow
Sleeve
90° plain Tee
Plain cap
M/F Plain reduction
90° plain reduced tee
By-pass
By-pass with coupling
Male threaded joint
Female threaded joint
Female threaded elbow
Female threaded elbow with brackets
Male threaded elbow
Female threaded tee
Male threaded tee
Double female threaded tee
Monocontrol mix shower
Tap with chrome cap PP/SEAT
Tap with chrome handle PP/SEAT
Valve with extractable ball
Standard Alignment Module
Complex Alignment Module

Tap with chrome cap PP/SEAT

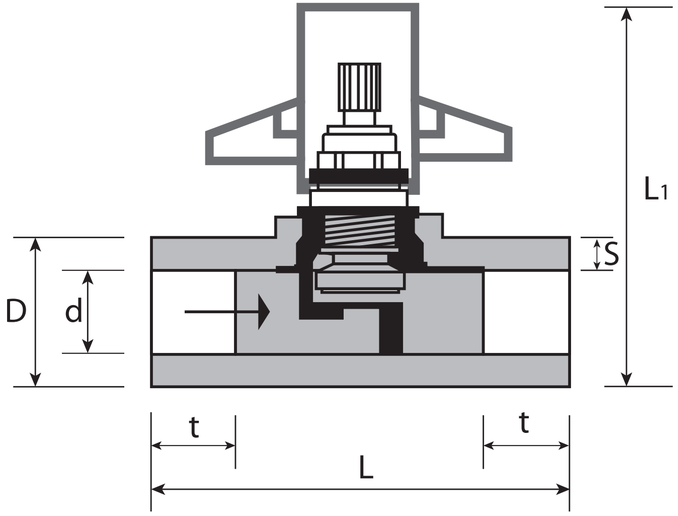

Code	Φ	d	D	L	S	t	V	L1
VD803020	20	19	29	75	4,5	16	1/2"	90
VD803025	25	24,2	34	87	5,0	17	3/4"	98
VD803032	32	31,1	44	98	6,8	22	3/4"	109

Mission
Quality policy
Raw material
Product range
Application areas
Pipes
Fittings
Mounting guidelines
Welding
Insulation
Service life
Pressure test
Chemical compatibility
Quality assurance
Boxing and shipping
Contacts

90° plain elbow
M/F 90° plain elbow
45° plain elbow
Sleeve
90° plain Tee
Plain cap
M/F Plain reduction
90° plain reduced tee
By-pass
By-pass with coupling
Male threaded joint
Female threaded joint
Female threaded elbow
Female threaded elbow with brackets
Male threaded elbow
Female threaded tee
Male threaded tee
Double female threaded tee
Monocontrol mix shower
Tap with chrome cap PP/SEAT
Tap with chrome handle PP/SEAT
Valve with extractable ball
Standard Alignment Module
Complex Alignment Module

Tap with chrome handle PP/SEAT

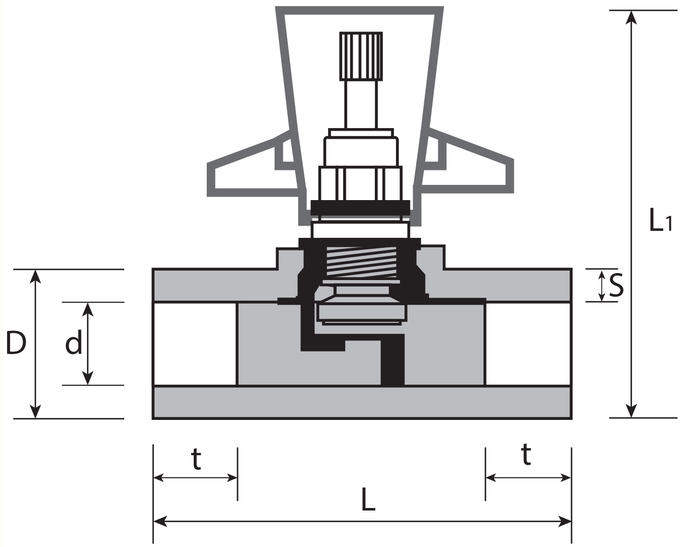

Code	Φ	d	D	L	S	t	V	L1
VD803520	20	19	29	75	4,5	16	1/2"	115
VD803525	25	24,2	34	87	5,0	17	3/4"	124
VD803532	32	31,1	44	98	6,8	22	3/4"	133

Mission
Quality policy
Raw material
Product range
Application areas
Pipes
Fittings
Mounting guidelines
Welding
Insulation
Service life
Pressure test
Chemical compatibility
Quality assurance
Boxing and shipping
Contacts

90° plain elbow
M/F 90° plain elbow
45° plain elbow
Sleeve
90° plain Tee
Plain cap
M/F Plain reduction
90° plain reduced tee
By-pass
By-pass with coupling
Male threaded joint
Female threaded joint
Female threaded elbow
Female threaded elbow with brackets
Male threaded elbow
Female threaded tee
Male threaded tee
Double female threaded tee
Monocontrol mix shower
Tap with chrome cap PP/SEAT
Tap with chrome handle PP/SEAT
Valve with extractable ball
Standard Alignment Module
Complex Alignment Module

Valve with extractable ball

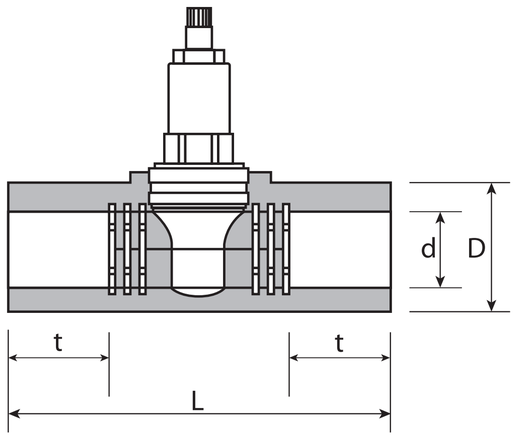

Φ	d	D	L	S	t
20	19	36	99	8,5	16
25	24	36	99	6	18
32	31.6	45	116	6.4	23

COMPLETE KIT

Code VD8040 CHROM CAP

Code VD8050 CHROM LEVER

Code VD8060 CHROM HANDLE

Mission
Quality policy
Raw material
Product range
Application areas
Pipes
Fittings
Mounting guidelines
Welding
Insulation
Service life
Pressure test
Chemical compatibility
Quality assurance
Boxing and shipping
Contacts

90° plain elbow
M/F 90° plain elbow
45° plain elbow
Sleeve
90° plain Tee
Plain cap
M/F Plain reduction
90° plain reduced tee
By-pass
By-pass with coupling
Male threaded joint
Female threaded joint
Female threaded elbow
Female threaded elbow with brackets
Male threaded elbow
Female threaded tee
Male threaded tee
Double female threaded tee
Monocontrol mix shower
Tap with chrome cap PP/SEAT
Tap with chrome handle PP/SEAT
Valve with extractable ball
Standard Alignment Module
Complex Alignment Module

Standard Alignment Module

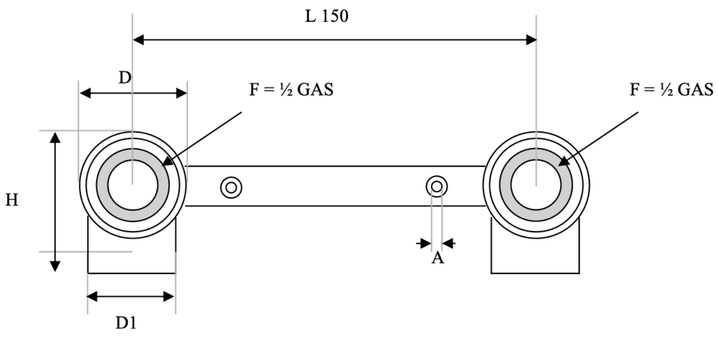

Code	Φ	D	A	L	H	D	D1	F
916507	20x½	19,2	3,0	150	54,7	41,3	35,5	½
916508	25x½	24,2	3,0	150	54,7	41,3	35,5	½

Mission
Quality policy
Raw material
Product range
Application areas
Pipes
Fittings
Mounting guidelines
Welding
Insulation
Service life
Pressure test
Chemical compatibility
Quality assurance
Boxing and shipping
Contacts

90° plain elbow
M/F 90° plain elbow
45° plain elbow
Sleeve
90° plain Tee
Plain cap
M/F Plain reduction
90° plain reduced tee
By-pass
By-pass with coupling
Male threaded joint
Female threaded joint
Female threaded elbow
Female threaded elbow with brackets
Male threaded elbow
Female threaded tee
Male threaded tee
Double female threaded tee
Monocontrol mix shower
Tap with chrome cap PP/SEAT
Tap with chrome handle PP/SEAT
Valve with extractable ball
Standard Alignment Module
Complex Alignment Module

Complex Alignment Module

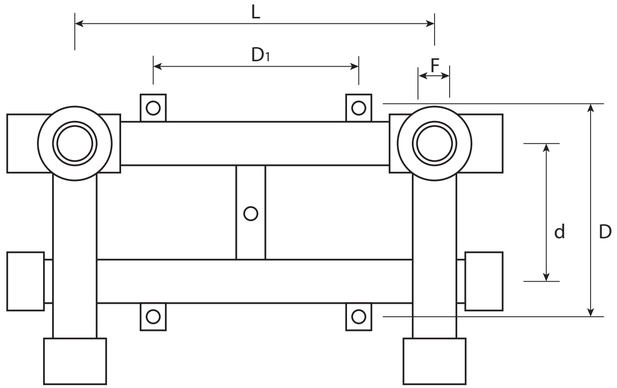

Code	Φ	d	D	L	D[1]	F
916510	20	59	93	15,5	78	1/2"

Mission
Quality policy
Raw material
Product range
Application areas
Pipes
Fittings
Mounting guidelines
Welding
Insulation
Service life
Pressure test
Chemical compatibility
Quality assurance
Boxing and shipping
Contacts

Mounting guidelines

Routing and Fixing PP/PP R Pipes

1. Installation must be performed by licensed, qualified personnel.
2. Do not route PP pipes for indoor water supply above gas or electrical services.
3. Maintain a minimum clearance of 10 cm from heat pipes, measured surface to surface; otherwise provide suitable thermal insulation.
4. Insulation recommendations:
   - Domestic hot water systems: insulate risers and horizontal runs.
   - Central heating systems: insulate risers in wall chases and horizontal runs passing through unheated areas.
5. Lay pipes to protect them from mechanical damage in all indoor water supply applications.
6. Components in direct contacts with plastics must incorporate an elastic (flexible) separator.
7. Where pipes pass through walls, use protective sleeves at least 2 cm longer than the wall thickness. Fill the annular space between pipe and sleeve with an elastic sealant/material.
8. Pipe clamps/supports must allow free axial sliding of the pipe.
9. Account for thermal expansion. Provide natural/self compensation or dedicated expansion loops/joints as required.
10. Join PP/PP R pipes by fusion welding and approved mechanical connectors only.
11. During welding, observe the specified parameters for the material and dimensions (heating time, temperature, insertion depth, cooling time).
12. Protect system components from UV radiation. Long term sunlight exposure degrades performance; unprotected outdoor runs must be covered with suitable UV resistant insulation or cladding.
13. During transport and installation, protect plastic components from impact, drops, blows, and any other mechanical damage.

Components of plastic piping systems must be protected against impact, falling, blow or any other mechanical damage during their transport and installation.

Mission
Quality policy
Raw material
Product range
Application areas
Pipes
Fittings
Mounting guidelines
Welding
Insulation
Service life
Pressure test
Chemical compatibility
Quality assurance
Boxing and shipping
Contacts

Mounting guidelines

Additional Requirements

- Use only components that are undamaged and uncontaminated after storage or transport.
- Minimum installation temperature for welding plastic piping is +5 °C; below this, reliable joint quality is difficult to achieve.
- Make pipeline crossings using components specifically designed for that purpose.
- Join plastic parts by polyfusion welding to obtain a high quality, homogeneous joint.
- Perform all joining under specified conditions using appropriate tools. Welding Plastofer components to other brands is not recommended and is not covered by warranty.
- Do not expose components to open flame.
- Cut pipes only with sharp, professional grade tools.
- Components must not be exposed to open fire.
- Sharp and professional tools can only be used to cut the pipes.

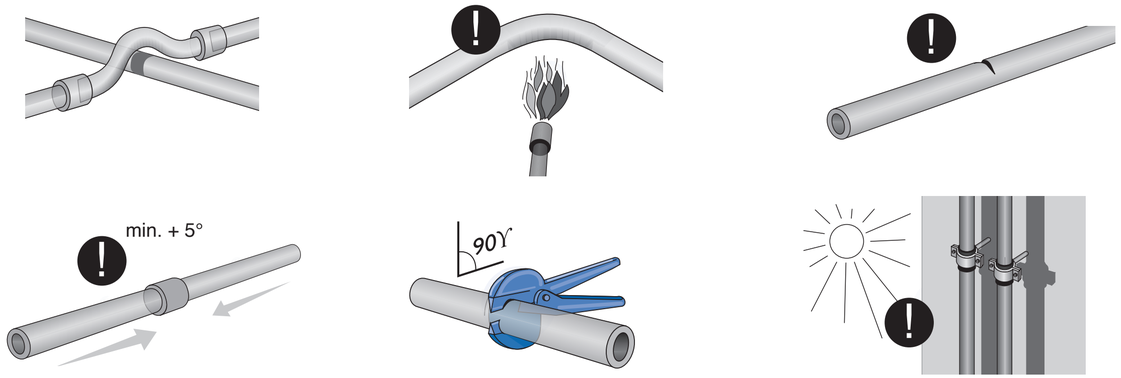

Mission
Quality policy
Raw material
Product range
Application areas
Pipes
Fittings
Mounting guidelines
Welding
Insulation
Service life
Pressure test
Chemical compatibility
Quality assurance
Boxing and shipping
Contacts

Mounting guidelines

Pipe fixing

Design considerations

Account for the material's thermal expansion coefficient, expected operating conditions (pressure and temperature), and joint type.

Plan the route to allow expansion and contraction, defining fixed and sliding points to manage linear movement.

Types of supports

Fixed point: a closely fitted pair of connectors within a clamp that restrains axial movement. Fixed points divide the installation into sections that elongate independently; thermal expansion is not transmitted beyond a fixed point.

Placement

- Space fixed points to permit adequate thermal compensation between them.
- Mandatory at draw-off points.
- Mandatory immediately before and after fittings or auxiliary devices (e.g., valves, filters, water meters, separators/settling tanks).

Sliding point a clamp/support that anchors the pipe to the structure while allowing free axial sliding, preventing excessive buckling.

Spacing

- Distance between sliding points depends on the medium temperature and the pipe's outside diameter.
- Maximum permissible spans for horizontal runs should follow the published table.
- STABI (aluminium-layer) pipes permit greater distances between sliding points due to higher rigidity.

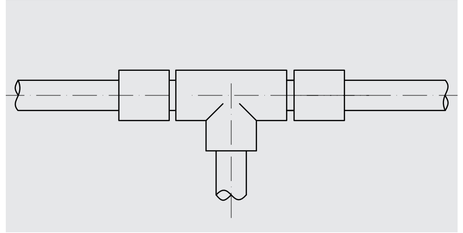

At pipe branch

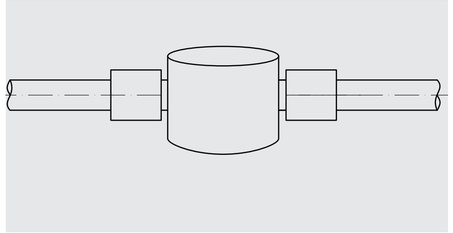

At the place of pipe fitting

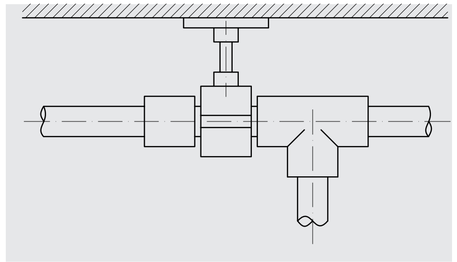

By loose pipe-straps

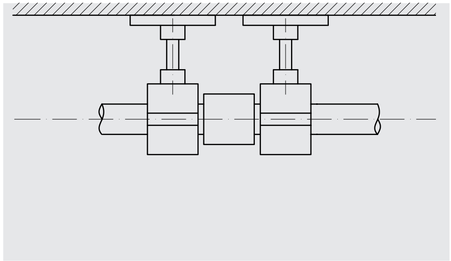

By pipe-straps suspended on hooks

Mission
Quality policy
Raw material
Product range
Application areas
Pipes
Fittings
Mounting guidelines
Welding
Insulation
Service life
Pressure test
Chemical compatibility
Quality assurance
Boxing and shipping
Contacts

Mounting guidelines

Maximum distances between supports

Temperature of medium in °C at density g/cm³

Maximum spacing of between supports enabling the pipe expansion for of vertical conduits is the same as for in case of horizontal conduits but it may be increased by 30%. If medium density is higher than 1g/cm³, then the reducing coefficient should be applied.

Standard pipe

Ø pipe (mm)	20	30	40	50	60	80
16	70	50	50	50	50	45
20	80	75	70	70	65	60
25	85	85	85	80	75	70
32	100	95	95	90	85	75
40	110	110	105	100	95	85
50	125	120	115	110	105	90
63	140	135	130	125	120	105
75	155	150	145	135	130	115
90	170	170	160	160	145	135
110	190	185	180	175	160	155

Fiber Reinforced

Ø pipe (mm)	20	30	40	50	60	80
16	120	110	100	100	100	80
20	150	125	115	115	105	105
25	160	135	120	120	115	110
32	170	160	140	140	135	130
40	185	190	160	160	155	150
50	210	195	185	180	170	165
63	235	230	200	190	185	175
75	250	245	210	200	195	185
90	265	255	220	210	205	190
110	270	265	255	245	235	215

Linear expansion

Polypropylene has a considerable coefficient of linear expansion α = 0.13-0.18 mm/m°K (depending on the temperature of the material). Consequently, during the mounting the system, pipe linear expansion, resulting from the change of temperature should be taken into account. The expansion of a pipe section is calculated with the following formula:

$\Delta L = \alpha \times L \times \Delta t$

Where: ΔL - linear expansion (mm) α - is coefficient of linear expansion (mm/m°K)

L - is initial length of a pipe (m) Δt - is temperature difference (°K)

Mission
Quality policy
Raw material
Product range
Application areas
Pipes
Fittings
Mounting guidelines
Welding
Insulation
Service life
Pressure test
Chemical compatibility
Quality assurance
Boxing and shipping
Contacts

Mounting guidelines

Linear expansion

The compensation of elongation is done by means of a flexible arm, an expansion loop and U-shape compensator.

The length of a flexible arm may be calculated with the following formula:

$$L_s = K x \sqrt{D x \Delta L}$$

Where: Ls - the length of flexible arm (mm)
ΔL - expansion of a pipe (mm)
K - material constant for polypropylene PP-R is 20
D - outer diameter (mm)

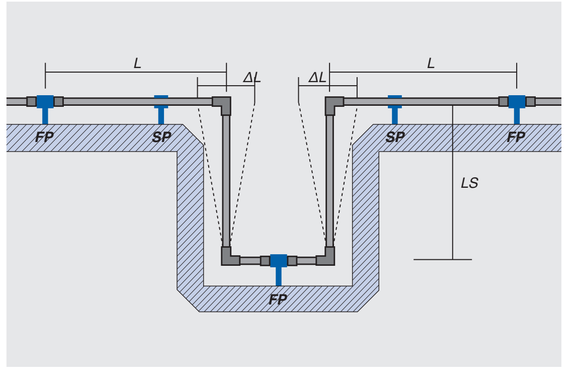

Example of U-expander compensator

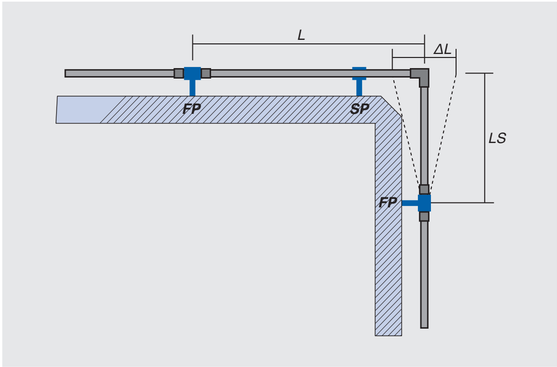

Example of expansion in A pipeline section near a curve

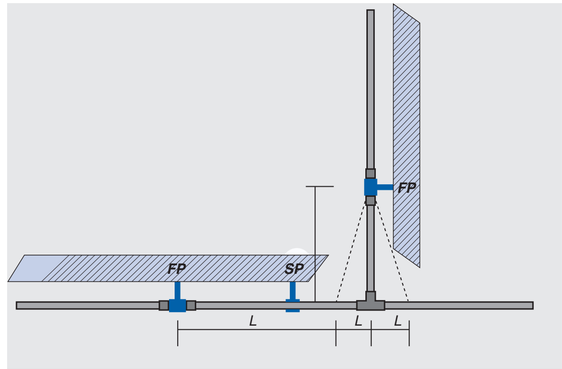

Example of expansion in A pipeline section near an inner branch.

Legend:
Δl - length variation SP - sliding point L - pipeline length FP - fixed point LS - U-expansion joint length

Mission
Quality policy
Raw material
Product range
Application areas
Pipes
Fittings
Mounting guidelines
Welding
Insulation
Service life
Pressure test
Chemical compatibility
Quality assurance
Boxing and shipping
Contacts

Mounting guidelines

Linear expansion

In order to make U-shape compensator outside flexible arm, the width of compensator should be known i.e. the distance between the arms:

S = 2 x ΔL + Amin (Amin. – Safety Width – assigned as 150mm)

In order to minimize the dimensions of compensators during assembly the initial wire tension is used. The assembly along with initial tension ensures aesthetic appearance of a system.

Length of initial tension = ΔL/2.

Symbol	Name	Value	Unit
α	Coefficient of linear expansion	0,15	mm/ m°C
L	Length of pipe	10	m
t_p	Operating Temperature	60	°C
t_m	Temperature during mounting	20	°C
Δt	Temperature difference Δt=tp-tm	40	°C

Symbol	Name	Value	Unit
K	PP-R material constant	20	-
D	Outside pipe diameter	40	mm
ΔL	Linear expansion	60	mm

Linear expansion ΔL = αxLxΔt

$$\Delta L = 0{,}15 x 10 x 40 = 60 mm$$

Compensating length:

$$L_s = K x \sqrt{D x \Delta L}$$

$$L_s = 20 x \sqrt{40 x 60} = 980 \text{ mm}$$

Compensation length with initial tension:

$$L_s = K x \sqrt{D x \frac{\Delta L}{2}}$$

$$L_s = 20 x \sqrt{40 x \frac{60}{2}} = 693 \text{ mm}$$

Mission
Quality policy
Raw material
Product range
Application areas
Pipes
Fittings
Mounting guidelines
Welding
Insulation
Service life
Pressure test
Chemical compatibility
Quality assurance
Boxing and shipping
Contacts

Mounting guidelines

Linear expansion

Length of flexible arm with initial tension may be calculated in the following way:

Length of pipeline L(m)	Difference in temperatures Δt (°C)						
	10	20	30	40	50	60	70
1	1,5	3,0	4,5	6,0	7,5	9,0	10,5
2	3,0	6,0	9.0	12,0	15,0	18.0	21,0
3	4,5	9,0	13,5	18,0	22,5	27,0	31,5
4	6,0	12,0	18,0	24,0	30,0	36,0	42,0
5	7,5	15,0	22,5	30,0	37,5	45,0	52,5
6	9,0	18,0	27,0	36,0	45,0	54,0	63,0
7	10,5	21,0	31,5	42,0	52,5	63,0	73,5
8	12,0	24,0	36,0	48,0	60,0	72,0	84,0
9	13,5	27,0	40,5	54.0	67,5	81,0	94,5
10	15,0	30,0	45,0	60.0	75,0	90,0	105.0
15	22,5	45,0	67,5	90,0	112,5	135,0	157,5
20	30,0	60,0	90,0	120,0	150,0	180,0	210,0

Length of pipeline L(m)	Difference in temperatures Δt (°C)						
	10	20	30	40	50	60	70
1	0,3	0,6	0,9	1,2	1,5	1,8	2,1
2	0.6	1,2	1.8	2.4	3,0	3,6	4,2
3	0,9	1,8	2,7	3,6	4,5	5,4	6,3
4	1.2	2,4	3.6	4.8	6,0	7,2	8,4
5	1,5	3,0	4,5	6,0	7,5	9,0	10,5
6	1.8	3,6	5,4	7.2	9,0	10,8	12,6
7	2,1	4,2	6,3	8,4	10,5	12,6	14,7
8	2,4	4,8	7,2	9,6	12,0	14,4	16,8
9	2.7	5,4	8,1	10,8	13,5	16,2	18,9
10	3.0	6,0	9,0	12,0	15,0	18,0	21,0
15	4,5	9,0	13,5	18,0	22,5	27,0	31,5
20	6.0	12,0	18,0	24,0	30,0	36.0	42,0

Pipe Lenght (m)	Temperature Δt (°C)							
	10	20	30	40	50	60	70	80
	Linear elongation Δl (mm)							
1	0,35	0,70	1,05	1,40	1,75	2,10	2,45	2,80
2	0,70	1,40	2,10	2,80	3,50	4,20	4,90	5,60
3	1,50	2,10	3,15	4,20	5,25	6,30	7,35	8,40
4	1,60	2,80	4,20	5,60	7,00	8,40	9,80	11,2
5	1,75	3,50	5,25	7,00	8,75	10,5	12,3	14,0
6	2,10	4,20	6,30	8,40	10,5	12,6	14,7	16,8
7	2,45	4,90	7,35	9,80	12,3	14,7	17,2	19,6
8	2,80	5,60	8,40	11,2	14,0	16,8	19,6	22,4
9	3,15	6,30	9,45	12,6	15,8	18,9	22,1	25,2
10	3,50	7,00	10,5	14,0	17,5	21,0	24,5	28,0

Fiber composite piping has 75% less elongaition
Elongaition coefficient: 0,035 mm/mk
Δl - 0,035 x m x Δt
Δl - lengthwise change
Δt - temperature change

Mission
Quality policy
Raw material
Product range
Application areas
Pipes
Fittings
Mounting guidelines
Welding
Insulation
Service life
Pressure test
Chemical compatibility
Quality assurance
Boxing and shipping
Contacts

Mounting guidelines

Pipeline Routing

General routing and drainage

Install pipes with a minimum gradient of 0.5% towards the lowest points, where draining via drain cocks or shut-off valves with outlets is provided.

Divide the system into sections that can be isolated when needed. Use straight valves and plastic ball valves; for built-in installations, use concealed shut-off or ball valves. Test valve operation (open/close) before installation. At terminal points for mixer taps, use a wall-mounting set with tap connectors.

Routing of Plastofer inlet piping (typical 20 mm runs in wall chases)

Inlet lines are typically 20 mm and routed in wall channels/chases. The insulated chase must be free of obstructions and allow for thermal expansion. Insulation both improves thermal performance and protects the pipe against mechanical damage, while facilitating expansion movement. Recommended insulation: expanded polystyrene (EPS) or polyurethane foam (PU).

Fixing before closing walls

Secure pipes firmly in the chase before closing (e.g., plastic or metal straps, or spot plastering as appropriate). For systems installed in stack/shaft partitions, use a suitable arrangement of metal clamps and support elements. Ensure insulation and allowance for expansion.

Routing in floors/ceilings

For water supply/distribution lines within floor or ceiling structures, use flexible plastic protective sleeves (polyethylene) to guard against mechanical damage; the air gap between sleeve and pipe provides thermal insulation.

Exposed/on wall routing

Freely laid (exposed) runs are generally limited to short distances in non-aesthetic areas (e.g., laundries, building service rooms). Position supports carefully to secure the pipe, accommodate expansion at covered transitions, and apply appropriate insulation. Cold-water pipes led on-wall in heated spaces should be insulated to reduce surface condensation risk. Exposed on-wall routing is acceptable where there is no risk of mechanical damage during normal operation.

Notes

Plan support spacing and fixed/sliding points according to pipe diameter and operating temperature to manage thermal expansion. Maintain clearances from heat sources and comply with local regulations for separation from gas and electrical services.

Mission
Quality policy
Raw material
Product range
Application areas
Pipes
Fittings
Mounting guidelines
Welding
Insulation
Service life
Pressure test
Chemical compatibility
Quality assurance
Boxing and shipping
Contacts

Mounting guidelines

Pipeline routing

Routing of Plastofer riser piping

In the case of riser piping it is necessary to consider precisely the layout of fixed points and sliding mounts as well as creation of a suitable expansion compensation system. The adjustments for expansion in riser piping systems are provided as follows:

Example of horizontal pipeline section with fixed points according to choice.
Expansion is counterbalanced by a circular compensator and by an expansio curve.

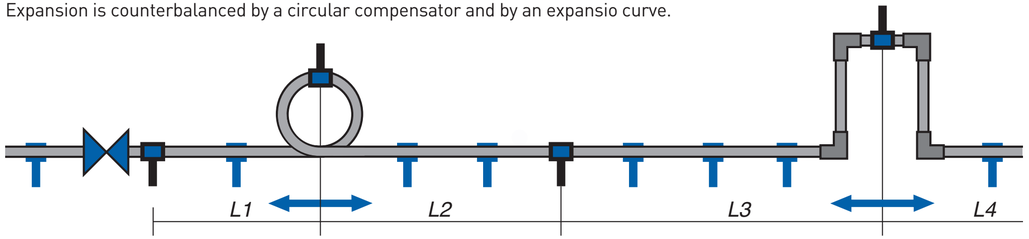

Example of placing a fixed point at the first floor.

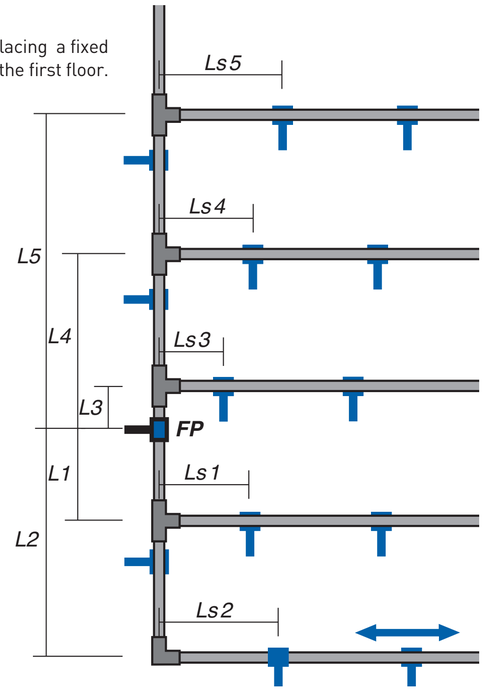

Example of placing a fixed point at the ground floor.

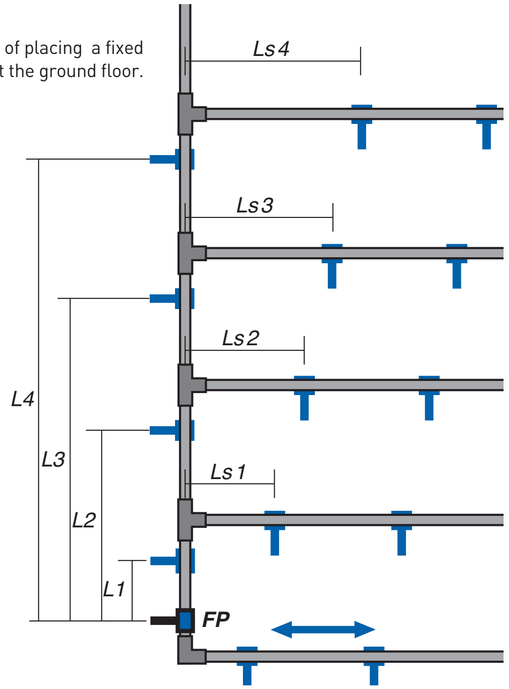

Mission
Quality policy
Raw material
Product range
Application areas
Pipes
Fittings
Mounting guidelines
Welding
Insulation
Service life
Pressure test
Chemical compatibility
Quality assurance
Boxing and shipping
Contacts

Mounting guidelines

Installation in ducts

If it is necessary to divide the riser into several expansion sections then it can be achieved by placing fixed points. The riser fixed points are always fixed under and over T-pieces at a branch pipe or socket which, at the same time, prevents the riser to fall. The pipe expansion must accounted for between these fixed points as follows:

In branching off feeder piping it is necessary to allow for the riser expansion by:

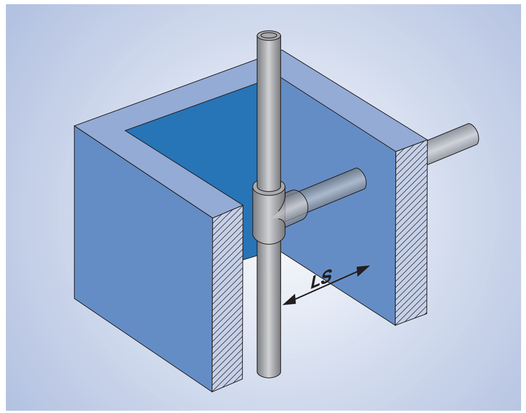

Keeping a sufficient distance from the wall pass-through point.

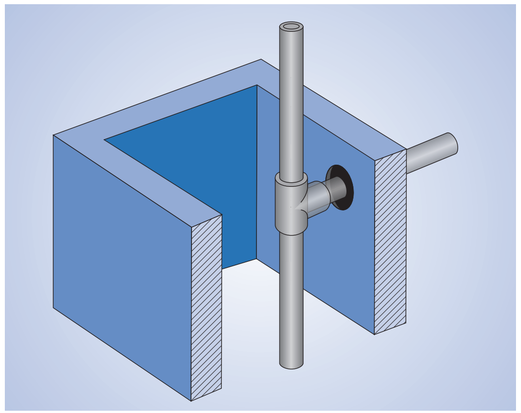

Creating a possibility of branch pipe movement in the wall pass through point

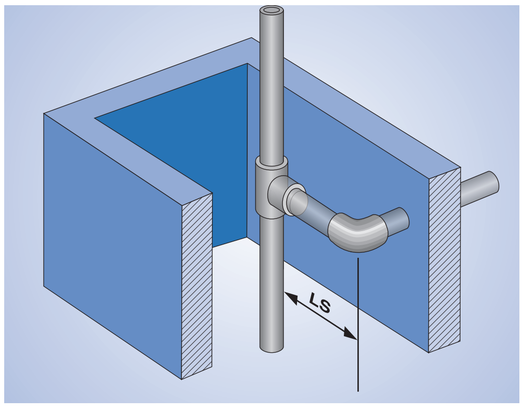

Creating a compensating length allowing for expansion at the riser normal line.

Mission
Quality policy
Raw material
Product range
Application areas
Pipes
Fittings
Mounting guidelines
Welding
Insulation
Service life
Pressure test
Chemical compatibility
Quality assurance
Boxing and shipping
Contacts

Welding

Cutting, Preparation, and Fusion Welding

1. Cutting to length
Cut the pipe perpendicular to its axis using a pipe cutter or rotary pipe cutter.

2. Cleaning and marking
Clean the pipe end and the mating fitting.
Mark the insertion depth on the pipe according to the reference table

3. STABI pipe preparation (aluminium layer)
For STABI pipes, remove the outer polypropylene and aluminium layer with a STABI shaver/cutter before welding. Machine to the stop; this defines the fusion depth. After shaving, verify the aluminium foil is fully removed.

4. Heating (fusion preparation)
When the welding tool reaches 260 °C, push the fitting and the pipe end onto the respective heating bushes/mandrels with a straight, non-rotating motion, to the previously marked depth. Heat for the time specified in the table for the given diameter and wall thickness.

5. Joining
Remove both parts from the heater and immediately push the pipe into the fitting without twisting, up to the marked depth. Align the pipe and fitting during insertion. Hold the joint steady (without movement) until initial set is achieved and the assembly is stable.

Times of working

Pipe outside diameter (mm)	Fitting depth (mm)	Heating time (s)	Working time (s)	Cooling time (min)
20	14	5	4	2
25	15	7	4	2
32	16,5	8	4	2
40	18	12	6	4
50	20	18	6	4
63	24	24	8	6
75	26	30	8	6
90	29	40	8	8
110	32,5	50	10	8

Mission
Quality policy
Raw material
Product range
Application areas
Pipes
Fittings
Mounting guidelines
Welding
Insulation
Service life
Pressure test
Chemical compatibility
Quality assurance
Boxing and shipping
Contacts

Welding

General requirements

- Material compatibility: Weld only components made from the same material.
- Single-pass heating: Heat the pipe and fitting simultaneously, and do not heat any component more than once.
- No rotation: During heating and joining, do not twist the pipe relative to the fitting or the heating bushes/mandrels.
- Time by diameter: Adjust heating and joining times according to element diameter and wall thickness per the reference table.
- PN 10 note: Heating time for PN 10 pipes is approximately half that of higher-pressure classes (per tooling/table guidance).
- Ambient temperature:
  - Recommended ambient temperature for welding is above +5 °C.
  - Below +5 °C, increase heating time by approximately 50% and continuously verify heater temperature.
  - Avoid welding below 0 °C.
- Visual quality check: A uniform, double, even bead (flash) around the full circumference indicates a sound joint.
- STABI preparation: For aluminium-layer (STABI) pipes, ensure the aluminium foil is fully removed from the fusion zone before welding.

CUTTER

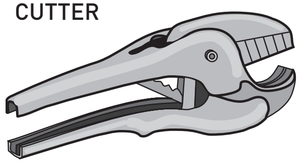

ELECTRICAL WELDING MACHINE

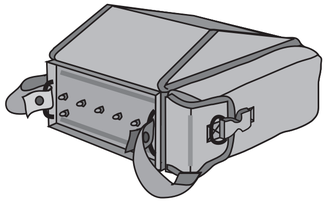

MOULD

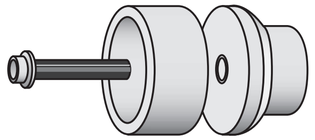

FUSION MACHINE

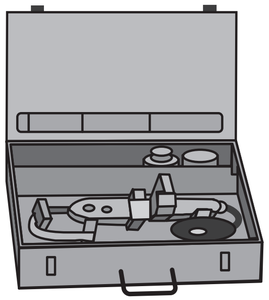

PEELER

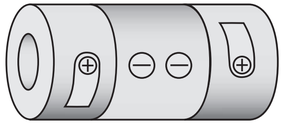

Mission
Quality policy
Raw material
Product range
Application areas
Pipes
Fittings
Mounting guidelines
Welding
Insulation
Service life
Pressure test
Chemical compatibility
Quality assurance
Boxing and shipping
Contacts

Insulation

Purpose

Hot-water and heating systems are insulated to reduce heat loss; cold-water systems are insulated to prevent heat gain and surface condensation ("sweating"). For drinking-water hygiene, cold-water insulation helps keep temperature below 20 °C, while hot-water insulation (with scald-protection setpoints) helps limit bacterial growth.

Hygiene considerations

Maintaining hot-water temperature within the required range and ensuring effective circulation are key measures against bacteria such as Legionella pneumophila, alongside other technical measures (e.g., thermal disinfection).

Selection of insulation

Determine insulation type and thickness based on:

- Thermal resistance (λ–value) of the insulation.
- Ambient humidity in the installation area.
- Temperature difference between room air and the water in the pipe.

Insulate the entire system along its route, including fittings and valves. Maintain at least the minimum required thickness around the full circumference and along the run. Split/tubular insulation installed lengthwise must be re-sealed to restore a continuous profile (e.g., adhesive, clips, or sealing tape).

Placement / routing of pipes	Insulation layer thickness X = 0,040 W/mK
Freely laid pipes in unheated areas (such as: basement areas)	4 mm
Freely laid pipes in heated areas	9 mm
Pipes in crawlways without a hot water line running in parallelel	4 mm
Pipes in crawlways with a hot water line running in parallelel	13 mm
Independently running underplaster pipes (in channels)	4 mm
Underplaster pipes (in channels) running in parallel with a hot water line	13 mm
Pipes cast over with concrete	4 mm

Mission
Quality policy
Raw material
Product range
Application areas
Pipes
Fittings
Mounting guidelines
Welding
Insulation
Service life
Pressure test
Chemical compatibility
Quality assurance
Boxing and shipping
Contacts

Insulation

Cold water systems

Aim to keep the water temperature below 20 °C. Insulation reduces heat gain and mitigates condensation risk on pipe surfaces.

Hot water systems

Plastic pipes have lower thermal conductivity than metal pipes, offering inherent heat-loss reduction. In high-demand systems (e.g., bathrooms, baths, washing machines), heat losses with plastic pipes can be around 20% of those with metal; thorough insulation can deliver an additional ~15% reduction. In low-demand or intermittent systems, expect smaller absolute savings (around 10% typically, up to ~20% at peak demand) due to limited warm-up.

Typical thickness guidance

For hot-water systems, typical insulation thickness ranges from 9 to 15 mm for materials with a thermal conductivity of $\lambda \approx 0.040$ W/m·K. For cold-water systems, select thickness to prevent surface temperature from reaching dew point under expected humidity; follow local codes or project calculations.

Installation notes

Avoid gaps or compression that reduces insulation effectiveness. Protect external runs from UV and weathering with appropriate jacketing. Ensure insulation continuity at supports and penetrations; use insulated hangers or add insulation saddles as required.

Mission
Quality policy
Raw material
Product range
Application areas
Pipes
Fittings
Mounting guidelines
Welding
Insulation
Service life
Pressure test
Chemical compatibility
Quality assurance
Boxing and shipping
Contacts

Service Life of Plastic Sanitary Installations

Dependence on temperature

Service life primarily depends on the rate of thermal ageing of the plastic. Permissible operating temperature is that which does not cause polymer degradation or structural damage.

In low-temperature systems where heating-water temperature does not exceed 65 °C, ageing proceeds slowly enough that a 50-year service life is readily achievable—typically aligning with the building's refurbishment cycle.

Central-heating temperature trends

Standard central-heating temperatures have shifted from 95/70 °C to 80/60 °C.

New and modernised systems should, where feasible, be designed for heating-water temperatures not exceeding 70 °C. This can be achieved by increasing heat-emitting surface (e.g., larger radiators or low-temperature emitters).

Determining service life (testing)

Service life is established experimentally by assessing survivability as a function of temperature and internal water pressure.

Tests are performed in controlled water baths/chambers with regulated pressure and temperature, using closed-end specimens.

Standard test durations are 1,000 or 8,000 hours (approximately 40 to 320 days).

Effects of ageing

With ageing, plastics lose elasticity, become more brittle, and their mechanical properties decline.

Early visible indicators may include:

- Colour change (yellowing, whitening, or dulling).
- Excessive sagging of conduits.
- Pores or micro-cracks at the surface, potentially leading to stress corrosion.
- In extreme cases, sudden rupture (bursting) can occur.

Action on observed symptoms

If ageing symptoms are detected, the installation should be evaluated immediately and representative samples tested.

Mission
Quality policy
Raw material
Product range
Application areas
Pipes
Fittings
Mounting guidelines
Welding
Insulation
Service life
Pressure test
Chemical compatibility
Quality assurance
Boxing and shipping
Contacts

Service life of plastic sanitary installations

Guarantee

Plastofer pipes and fittings are covered by an insurance-backed guarantee against damage arising from manifest manufacturing defects. Plastofer will compensate for losses caused by the exceptional failure of Plastofer pipes or fittings. The guarantee is valid for 10 years from the date of system installation. Exclusions — the insurance does not cover damage resulting from:

- Installations carried out contrary to the technical instructions.
- Incorrect welding or welding performed with unsuitable tools.
- Welding Plastofer pipes or fittings to similar products not manufactured by Plastofer.
- Installation of pipes and fittings showing evident deterioration due to improper storage or handling.
- Conveyance of corrosive liquids under inappropriate conditions or concentrations, or media not listed in the applicable chemical-resistance tables.

Claims procedure

In the event of damage, notify Plastofer in writing immediately.

To benefit from the guarantee, request the guarantee certificate from your distributor and ensure it is completed and forwarded to the manufacturer with the following details:

- Installing company's name.
- Place and date of installation.
- User's and distributor's stamps and signatures.
- Claims or disputes will not be accepted if the guarantee certificate has not been completed and submitted in advance.

Mission
Quality policy
Raw material
Product range
Application areas
Pipes
Fittings
Mounting guidelines
Welding
Insulation
Service life
Pressure test
Chemical compatibility
Quality assurance
Boxing and shipping
Contacts

Pressure test

Test procedure A

To use Procedure A to apply the hydrostatic test pressure conduct the procedure as follows:

A) Open the venting system;

B) Purge the system with water to expel all air that can be removed thereby. Stop the flow and close the venting system;

C) Apply the selected hydrostatic test pressure equal to 1,5 times the design pressure by pumping according to Figure 12 during the first 30 min, during which time an inspection should be carried out to identify any obvious leaks with the system under test;

D) Reduce the pressure by rapidly bleeding water from the system to 0,5 times design pressure according to Figure 12;

E) Close the valve. The recovery of a constant pressure, which is higher than 0,5 times the design pressure, is indicative of a sound system.
Monitor the situation for 90 min. Visually check for leaks. If during that period there is a drop in pressure, this indicates a leak within the system;

F) The test result should be recorded.

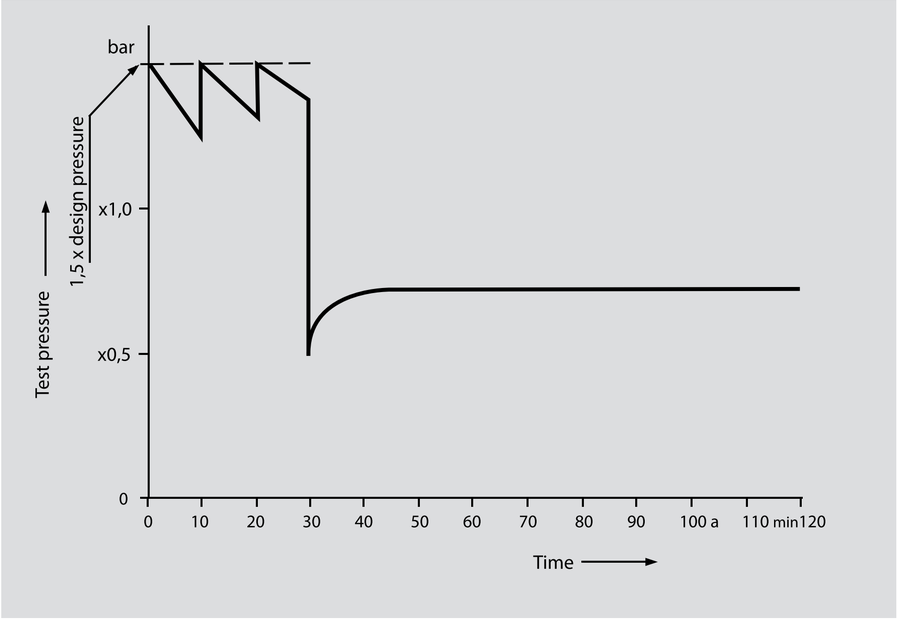

Mission
Quality policy
Raw material
Product range
Application areas
Pipes
Fittings
Mounting guidelines
Welding
Insulation
Service life
Pressure test
Chemical compatibility
Quality assurance
Boxing and shipping
Contacts

Pressure test

Test procedure B

To use Procedure B to apply the hydrostatic test pressure, conduct the procedure as follows:

A) Open the venting system;

B) Purge the system with water to expel all air that can be removed thereby. Stop the flow and close the venting system;

C) Apply the selected test pressure equal to 1,5 times the design pressure by pumping according to Figure 13 during the first 30 min;

D) Read the pressure when the first 30 min have elapsed;

E) Read the pressure after another 30 min and visually check for leaks. If the pressure has dropped by less than 0,6 bar conclude the system has no obvious leakage and continue the test without further pumping;

F) Visually check for leaks and if during the next 2 h, the pressure drops by more than 0,2 bar this

G) Indicates a leak within the system.

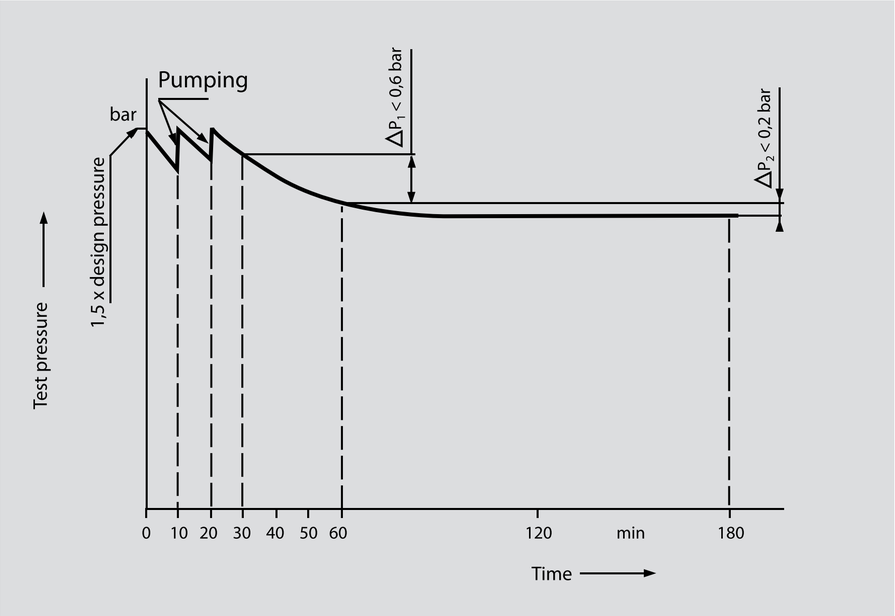

The test result should be recorded. For smaller sections of an installation the test Procedure B may be reduced to only stages a) to e) and g).

Mission
Quality policy
Raw material
Product range
Application areas
Pipes
Fittings
Mounting guidelines
Welding
Insulation
Service life
Pressure test
Chemical compatibility
Quality assurance
Boxing and shipping
Contacts

Pressure test

Pressure loss tables

Fitting	Picture	Symbol	Comment	Coefficient of loss ζ
Socket				0.25
Reducer MF			by 1 dimension	0.40
			by 2 dimension	0.50
			by 3 dimension	0.60
Elbow 90°				1.50
Elbow 45°				0.60
Equal Tee				0.25
			Separation of flow	1.20
			Conjunction of flow	0.80
			Counter current in case of separation of flow	1.80
			Counter current in case of conjunction of flow	3.00
Reducer tee	Sum of ζ Equal Tee and ζ Reducer			
Four Way Fitting			Separation of flow	2.10
			Conjunction of flow	3.70
Socket Female Thread				0.50
Socket Male Thread				0.70
Elbow Female Thread				1.40
Elbow Male Thread				1.60
Tee Female Thread			Separation of flow	1.40
Tee Male Thread			Separation of flow	1.80
Ball Valve			20	0.50

Continous pressure drop SDR 6 20° / 70°

Rugosity	0,007 mm	0,007 mm
Specific weight	998,00 kg/m3	
Temperature	20° C	70° C
Viscosity	1,02E-06 m²/s	4,30E-07 m2/s

Legend symbols
977,20 kg/m3 Q= flow (l/s) De= Ø ext. (mm) Di= Ø int. (mm)
R= continous pressure drop (mbar/m)
V= speed (m/s)

Q = l/s	De / Di	20 mm 13,2 mm		25 mm 16,6 mm		32 mm 21,2 mm		40 mm 26,6 mm		50 mm 33,4 mm		63 mm 42,0 mm		75 mm 50,0 mm		90 mm 60,0 mm		110 mm 73,4 mm	
0,01	R	0,14	0,09	0,05	0,02	0,02	0,01	0,01	0,00	0,00	0,00	0,00	0,00	0,00	0,00				
	V	0,07	0,07	0,05	0,05	0,03	0,03	0,02	0,02	0,01	0,01	0,01	0,01	0,01	0,01				
0,02	R	0,27	0,29	0,11	0,10	0,04	0,03	0,02	0,01	0,01	0,00	0,00	0,00	0,00	0,00	0,00			
	V	0,15	0,15	0,09	0,09	0,06	0,06	0,04	0,04	0,02	0,02	0,01	0,01	0,01	0,01	0,01			
0,03	R	0,81	0,60	0,16	0,20	0,06	0,06	0,02	0,02	0,01	0,01	0,00	0,00	0,00	0,00	0,00	0,00		
	V	0,22	0,22	0,14	0,14	0,08	0,08	0,05	0,05	0,03	0,03	0,02	0,02	0,02	0,02	0,01	0,01		
0,04	R	1,33	0,99	0,45	0,33	0,14	0,10	0,03	0,04	0,01	0,01	0,01	0,00	0,00	0,00	0,00	0,00		
	V	0,29	0,29	0,18	0,18	0,11	0,11	0,07	0,07	0,05	0,05	0,03	0,03	0,02	0,02	0,01	0,01		
0,05	R	1,94	1,46	0,66	0,49	0,21	0,15	0,07	0,05	0,02	0,02	0,01	0,01	0,00	0,00	0,00	0,00		
	V	0,37	0,37	0,23	0,23	0,14	0,14	0,09	0,09	0,06	0,06	0,04	0,04	0,03	0,03	0,02	0,02		
0,06	R	2,66	2,02	0,90	0,67	0,28	0,21	0,10	0,07	0,02	0,02	0,01	0,01	0,00	0,00	0,00	0,00		
	V	0,44	0,44	0,28	0,28	0,17	0,17	0,11	0,11	0,07	0,07	0,04	0,04	0,03	0,03	0,02	0,02		
0,07	R	3,48	2,65	1,17	0,88	0,37	0,27	0,13	0,09	0,04	0,03	0,01	0,01	0,00	0,00	0,00	0,00		
	V	0,51	0,51	0,32	0,32	0,20	0,20	0,13	0,13	0,08	0,08	0,05	0,05	0,04	0,04	0,02	0,02		
0,08	R	4,39	3,36	1,48	1,12	0,46	0,35	0,16	0,12	0,06	0,04	0,02	0,01	0,01	0,01	0,00	0,00		
	V	0,58	0,58	0,37	0,37	0,23	0,23	0,14	0,14	0,09	0,09	0,06	0,06	0,04	0,04	0,03	0,03		
0,09	R	5,39	4,15	1,81	1,38	0,57	0,43	0,19	0,14	0,07	0,05	0,02	0,02	0,01	0,01	0,00	0,00		
	V	0,66	0,66	0,42	0,42	0,25	0,25	0,16	0,16	0,10	0,10	0,06	0,06	0,05	0,05	0,03	0,03		
0,10	R	6,48	5,02	2,17	1,66	0,68	0,51	0,23	0,17	0,08	0,06	0,03	0,02	0,01	0,01	0,00	0,00		
	V	0,73	0,73	0,46	0,46	0,28	0,28	0,18	0,18	0,12	0,12	0,07	0,07	0,05	0,05	0,04	0,04		
0,12	R	8,92	6,97	2,99	2,30	0,93	0,71	0,32	0,24	0,11	0,08	0,04	0,03	0,02	0,01	0,01	0,00		
	V	0,88	0,88	0,55	0,55	0,34	0,34	0,22	0,22	0,14	0,14	0,09	0,09	0,06	0,06	0,04	0,04		
0,14	R	11,7	9,22	3,91	3,03	1,22	0,93	0,42	0,31	0,15	0,11	0,05	0,04	0,02	0,02	0,01	0,01		
	V	1,02	1,02	0,65	0,65	0,40	0,40	0,25	0,25	0,16	0,16	0,10	0,10	0,07	0,07	0,06	0,05		
0,16	R	14,8	11,8	4,94	3,85	1,54	1,18	0,52	0,40	0,18	0,14	0,06	0,04	0,03	0,02	0,01	0,01		
	V	1,17	1,17	0,74	0,74	0,45	0,45	0,29	0,29	0,18	0,18	0,12	0,12	0,08	0,08	0,06	0,06		
0,18	R	18,3	14,6	6,08	4,77	1,89	1,46	0,64	0,49	0,22	0,17	0,07	0,06	0,03	0,02	0,01	0,01	0,01	0,00
	V	1,32	1,32	0,83	0,83	0,51	0,51	0,32	0,32	0,21	0,21	0,13	0,13	0,09	0,09	0,06	0,06	0,04	0,00
0,20	R	22,0	17,6	7,32	5,77	2,27	1,76	0,77	0,59	0,27	0,20	0,09	0,07	0,04	0,03	0,02	0,01	0,01	0,01
	V	1,46	1,46	0,92	0,92	0,57	0,57	0,36	0,36	0,23	0,23	0,14	0,14	0,10	0,10	0,07	0,07	0,05	0,05
0,30	R	45,6	37,4	15,1	12,1	4,64	3,66	1,57	1,22	0,55	0,42	0,18	0,14	0,08	0,06	0,03	0,02	0,01	0,01
	V	2,19	2,19	1,39	1,39	0,85	0,85	0,54	0,54	0,35	0,35	0,22	0,22	0,15	0,15	0,11	0,11	0,07	0,07
0,40	R	76,8	63,9	25,2	20,5	7,74	6,18	2,61	2,05	0,90	0,70	0,29	0,23	0,13	0,10	0,05	0,04	0,02	0,07
	V	2,92	2,92	1,85	1,85	1,13	1,13	0,72	0,72	0,46	0,46	0,29	0,29	0,20	0,20	0,14	0,14	0,10	0,10
0,50	R	115	97,6	37,7	31,1	11,5	9,31	3,87	3,07	1,34	1,05	0,44	0,34	0,19	0,15	0,08	0,06	0,03	0,03
	V	3,65	3,65	2,31	2,31	1,42	1,42	0,90	0,90	0,58	0,58	0,36	0,36	0,25	0,25	0,18	0,18	0,12	0,12
0,60	R	161		52,5	43,7	16,0	13,1	5,35	4,28	1,85	1,46	0,60	0,47	0,26	0,20	0,11	0,08	0,04	0,03
	V	4,38		2,77	2,77	1,70	1,70	1,08	1,08	0,69	0,69	0,43	0,43	0,31	0,31	0,21	0,21	0,14	0,14
0,70	R	214		69,5	58,4	21,2	17,3	7,05	5,68	2,43	1,93	0,79	0,62	0,34	0,27	0,14	0,11	0,06	0,05
	V	5,12		3,23	3,23	1,98	1,98	1,26	1,26	0,81	0,81	0,51	0,51	0,36	0,36	0,25	0,25	0,17	0,17
0,80	R			88,7		26,9	22,2	8,96	7,26	3,08	2,46	1,00	0,78	0,43	0,34	0,18	0,14	0,07	0,06
	V			3,70		2,27	2,27	1,44	1,44	0,92	0,92	0,58	0,58	0,41	0,41	0,28	0,28	0,19	0,19
0,90	R			110		33,3	27,7	11,1	9,03	3,80	3,05	1,23	0,97	0,53	0,42	0,22	0,17	0,09	0,07
	V			4,16		2,55	2,55	1,62	1,62	1,04	1,04	0,65	0,65	0,46	0,46	0,32	0,32	0,21	0,21
1,00	R			133		40,4	33,8	13,4	10,9	4,59	3,70	1,48	1,18	0,64	0,51	0,27	0,21	0,10	0,08
	V			4,62		2,83	2,83	1,80	1,80	1,16	1,16	0,72	0,72	0,51	0,51	0,35	0,35	0,24	0,24
1,20	R					56,3	47,7	18,7	15,4	6,37	5,17	2,05	1,64	0,89	0,70	0,37	0,29	0,14	0,10
	V					3,40	3,40	2,16	2,16	1,39	1,39	0,87	0,87	0,61	0,61	0,42	0,42	0,29	0,29
1,40	R					74,8		24,6	20,5	8,41	6,87	2,70	2,17	1,17	0,93	0,49	0,38	0,19	0,13
	V					3,97		2,52	2,52	1,62	1,62	1,01	1,01	0,71	0,71	0,50	0,50	0,33	0,33
1,60	R					95,6		31,5	26,4	10,7	8,80	3,43	2,78	1,48	1,19	0,62	0,49	0,24	0,17
	V					4,53		2,88	2,88	1,85	1,86	1,15	1,15	0,81	0,81	0,57	0,57	0,38	0,38
1,80	R							39,1	32,9	13,2	10,9	4,24	3,45	1,83	1,47	0,76	0,61	0,29	0,22
	V							3,24	3,24	2,08	2,08	1,30	1,30	0,92	0,92	0,64	0,64	0,43	0,43
2,00	R							47,4		16,1	13,4	5,13	4,19	2,21	1,78	0,92	0,73	0,35	0,25
	V							3,60		2,31	2,31	1,44	1,44	1,02	1,02	0,71	0,71	0,48	0,48
2,20	R							56,4		19,1	15,9	6,10	5,00	2,63	2,13	1,09	0,87	0,42	0,30
	V							3,96		2,54	2,54	1,59	1,59	1,12	1,12	0,78	0,78	0,52	0,52
2,40	R							66,2		22,4	18,7	7,14	5,87	3,07	2,49	1,28	1,02	0,49	0,37
	V							4,32		2,77	2,77	1,73	1,73	1,22	1,22	0,85	0,85	0,57	0,57
2,60	R							76,8		25,9	21,8	8,25	6,81	3,55	2,89	1,47	1,19	0,57	0,42
	V							4,68		3,00	3,00	1,88	1,88	1,32	1,32	0,92	0,92	0,62	0,62
2,80	R							88,1		29,7	25,2	9,44	7,82	4,06	3,32	1,68	1,36	0,65	0,48
	V							5,04		3,23	3,23	2,02	2,02	1,43	1,43	0,99	0,99	0,67	0,67
3,00	R									33,7		10,7	8,89	4,59	3,77	1,90	1,54	0,73	0,54
	V									3,47		2,17	2,17	1,53	1,53	1,06	1,06	0,71	0,71

Mission
Quality policy
Raw material
Product range
Application areas
Pipes
Fittings
Mounting guidelines
Welding
Insulation
Service life
Pressure test
Chemical compatibility
Quality assurance
Boxing and shipping
Contacts

Pressure test

Continous pressure drop SDR 6 20° / 70°

Rugosity	0,007 mm	0,007 mm
Specific weight	998,00 kg/m3	
Temperature	20° C	70° C
Viscosity	1,02E-06 m²/s	4,30E-07 m2/s

Legend symbols
977,20 kg/m3 Q= flow (l/s) De= Ø ext. (mm) Di= Ø int. (mm)
R= continous pressure drop (mbar/m)
V= speed (m/s)

Q = l/s	De Di	20 mm 13,2 mm	25 mm 16,6 mm	32 mm 21,2 mm	40 mm 26,6 mm	50 mm 33,4 mm	63 mm 42,0 mm		75 mm 50,0 mm		90 mm 60,0 mm		110 mm 73,4 mm	
3,20	R					37,9	12,1	10,1	5,16	4,25	2,14	1,74	0,87	0,61
	V					3,70	2,31	2,31	1,63	1,63	1,13	1,13	0,76	0,76
3,40	R					42,4	13,4	11,2	5,76	4,75	2,39	1,94	0,91	0,68
	V					3,93	2,45	2,45	1,73	1,73	1,20	1,20	0,81	0,81
3,60	R					47,1	14,9	12,5	6,39	5,28	2,65	2,16	1,01	0,75
	V					4,16	2,60	2,60	1,83	1,83	1,27	1,27	0,86	0,86
3,80	R					52,1	16,5	13,8	7,06	5,84	2,92	2,38	1,17	0,82
	V					4,39	2,74	2,74	1,94	1,94	1,34	1,34	0,90	0,90
4,00	R					57,3	18,1	15,3	7,75	6,43	3,20	2,62	1,23	0,91
	V					4,62	2,89	2,89	2,04	2,04	1,41	1,41	0,95	0,95
4,20	R					62,7	18,8	16,8	8,47	7,04	3,50	2,87	1,34	1,00
	V					4,85	3,03	3,03	2,14	2,14	1,49	1,49	1,00	1,00
4,40	R					68,4	21,6	18,3	9,22	7,68	3,80	3,13	1,45	1,09
	V					5,08	3,18	3,18	2,24	2,24	1,56	1,56	1,05	1,06
4,60	R						23,5		9,99	8,35	4,12	3,40	1,58	1,19
	V						3,32		2,34	2,34	1,63	1,63	1,03	1,09
4,80	R						25,3		10,8	9,05	4,45	3,68	1,70	1,29
	V						3,46		2,44	2,44	1,70	1,70	1,09	1,14
5,00	R						27,3		11,6	9,76	4,80	3,97	1,83	1,39
	V						3,61		2,55	2,55	1,77	1,77	1,19	1,19
5,20	R						29,3		12,5	10,5	5,15	4,27	1,97	1,67
	V						3,75		2,65	2,65	1,84	1,84	1,24	1,24
5,40	R						31,4		13,4	11,2	5,52	4,58	2,11	1,60
	V						3,90		2,75	2,75	1,91	1,91	1,28	1,28
5,60	R						33,6		14,3	12,1	5,90	4,90	2,25	1,71
	V						4,04		2,85	2,85	1,98	1,98	1,33	1,33
5,80	R						35,9		15,3	12,9	6,29	5,23	2,40	1,82
	V						4,19		2,95	2,95	2,05	2,05	1,38	1,38
6,00	R						38,2		16,2	13,8	6,69	5,57	2,55	1,94
	V						4,33		3,06	3,06	2,12	2,12	1,43	1,43
6,20	R						40,6		17,3	14,7	7,10	5,93	2,70	2,07
	V						4,48		3,16	3,16	2,19	2,19	1,47	1,47
6,40	R						43,1		18,3	15,6	7,52	6,29	2,87	2,19
	V						4,62		3,26	3,26	2,26	2,26	1,52	1,52
6,60	R						45,6		19,4	16,5	7,96	6,66	3,03	2,32
	V						4,76		3,36	3,36	2,33	2,33	1,57	1,57
6,80	R						48,2		20,5	17,4	8,41	7,05	3,20	2,47
	V						4,91		3,46	3,46	2,41	2,41	1,62	1,62
7,00	R						50,8		21,6		8,86	7,44	3,27	2,60
	V						5,05		3,57		2,48	2,48	1,66	1,66
7,50	R								24,5		10,1	8,47	3,82	2,96
	V								3,82		2,65	2,65	1,78	1,78
8,00	R								27,6		11,3	9,61	4,30	3,39
	V								4,07		2,83	2,83	1,90	1,90
9,00	R								34,4		14,1	11,9	5,33	4,23
	V								4,58		3,18	3,18	2,14	2,14
10,0	R								41,8		17,1	14,6	6,47	5,08
	V								5,09		3,54	3,54	2,38	2,38

Continous pressure drop SDR 7,4 20° / 67°

Rugosity	0,007 mm	0,007 mm
Specific weight	998,00 kg/m3	
Temperature	20° C	67° C
Viscosity	1,02E-06 m²/s	4,30E-07 m2/s

Legend symbols
977,20 kg/m3 Q= flow (l/s) De= Ø ext. (mm) Di= Ø int. (mm)
R= continous pressure drop (mbar/m)
V= speed (m/s)

Q = l/s	De Di	20 mm 14,4 mm		25 mm 18,0 mm		32 mm 23,2 mm		40 mm 29,0 mm		50 mm 36,2 mm		63 mm 45,8 mm		75 mm 54,4 mm		90 mm 65,4 mm		110 mm 79,8 mm		125 mm 90,8 mm	
0,01	R	0,10	0,04	0,04	0,02	0,01	0,01	0,01	0,00	0,00	0,00										
	V	0,06	0,06	0,04	0,04	0,02	0,02	0,02	0,02	0,01	0,01										
0,02	R	0,19	0,21	0,08	0,07	0,03	0,02	0,01	0,01	0,00	0,00	0,00	0,00								
	V	0,12	0,12	0,08	0,08	0,06	0,06	0,03	0,03	0,02	0,02	0,01	0,01								
0,03	R	0,54	0,42	0,12	0,15	0,04	0,05	0,02	0,02	0,01	0,00	0,00	0,00	0,00	0,00	0,00	0,00				
	V	0,18	0,18	0,12	0,12	0,07	0,07	0,05	0,05	0,03	0,03	0,02	0,02	0,01	0,01	0,01	0,01				
0,04	R	0,88	0,70	0,31	0,24	0,06	0,08	0,02	0,03	0,01	0,01	0,00	0,00	0,00	0,00	0,00	0,00				
	V	0,25	0,25	0,16	0,16	0,10	0,10	0,06	0,06	0,04	0,04	0,02	0,02	0,02	0,02	0,01	0,01				
0,05	R	1,29	1,03	0,45	0,36	0,14	0,11	0,03	0,04	0,01	0,01	0,00	0,00	0,00	0,00	0,00	0,00				
	V	0,31	0,31	0,20	0,20	0,12	0,12	0,08	0,08	0,05	0,05	0,03	0,03	0,02	0,02	0,02	0,02				
0,06	R	1,76	1,42	0,61	0,49	0,19	0,15	0,07	0,05	0,01	0,02	0,01	0,01	0,00	0,00	0,00	0,00				
	V	0,37	0,37	0,24	0,24	0,14	0,14	0,09	0,09	0,06	0,06	0,04	0,04	0,03	0,03	0,02	0,02				
0,07	R	2,30	1,86	0,80	0,64	0,25	0,20	0,09	0,07	0,03	0,02	0,01	0,01	0,00	0,00	0,00	0,00				
	V	0,43	0,43	0,28	0,28	0,17	0,17	0,11	0,11	0,07	0,07	0,04	0,04	0,03	0,03	0,02	0,02				
0,08	R	2,90	2,36	1,10	0,81	0,12	0,25	0,11	0,09	0,04	0,03	0,01	0,01	0,00	0,00	0,00	0,00				
	V	0,40	0,49	0,31	0,31	0,19	0,19	0,12	0,12	0,08	0,08	0,05	0,05	0,03	0,05	0,02	0,03				
0,09	R	3,56	2,91	1,23	1,00	0,39	0,31	0,13	0,11	0,05	0,04	0,02	0,01	0,00	0,00	0,00	0,00				
	V	0,55	0,56	0,35	0,35	0,22	0,22	0,14	0,14	0,09	0,09	0,06	0,06	0,04	0,04	0,03	0,03				
0,10	R	4,28	3,51	1,48	1,20	0,46	0,37	0,16	0,13	0,05	0,04	0,02	0,01	0,00	0,01	0,00	0,00				
	V	0,61	0,61	0,39	0,39	0,24	0,24	0,15	0,15	0,10	0,10	0,06	0,06	0,04	0,04	0,03	0,03				
0,12	R	0,58	4,86	2,03	1,66	0,63	0,51	0,22	0,18	0,07	0,06	0,03	0,02	0,01	0,01	0,00	0,00				
	V	0,74	0,74	0,47	0,47	0,29	0,29	0,18	0,18	0,12	0,12	0,07	0,07	0,05	0,05	0,04	0,04				
0,14	R	0,77	6,40	2,66	2,18	0,83	0,67	0,29	0,23	0,10	0,08	0,03	0,03	0,01	0,01	0,01	0,00				
	V	0,86	0,86	0,55	0,55	0,34	0,34	0,21	0,21	0,14	0,14	0,09	0,09	0,06	0,06	0,04	0,04				
0,16	R	9,76	8,14	3,36	2,77	1,04	0,85	0,36	0,29	0,12	0,10	0,04	0,03	0,02	0,01	0,01	0,01				
	V	0,98	0,98	0,63	0,63	0,39	0,39	0,25	0,25	0,16	0,16	0,10	0,10	0,07	0,07	0,05	0,05				
0,18	R	12,0	10,0	4,13	3,42	1,28	1,05	0,44	0,36	0,15	0,12	0,05	0,04	0,02	0,02	0,01	0,01				
	V	1,11	1,11	0,71	0,71	0,43	0,43	0,28	0,28	0,17	0,17	0,11	0,11	0,08	0,08	0,05	0,05				
0,20	R	14,5	12,1	4,97	4,13	1,54	1,27	0,53	0,43	0,18	0,14	0,06	0,05	0,03	0,02	0,01	0,01				
	V	1,23	1,23	0,79	0,79	0,48	0,48	0,31	0,31	0,19	0,19	0,12	0,12	0,09	0,09	0,06	0,06				
0,30	R	29,9	25,5	10,1	8,58	3,14	2,61	1,07	0,88	0,36	0,30	0,12	0,10	0,05	0,04	0,02	0,02	0,01	0,01	0,00	0,00
	V	1,84	1,84	1,18	1,18	0,72	0,72	0,46	0,46	0,29	0,29	0,18	0,18	0,13	0,13	0,09	0,09	0,06	0,06	0,05	0,05
0,40	R	50,2	43,4	17,4	14,5	5,23	4,39	1,78	1,48	0,60	0,49	0,20	0,16	0,09	0,07	0,04	0,03	0,01	0,01	0,01	0,01
	V	2,46	2,46	1,57	1,57	0,96	0,96	0,61	0,61	0,29	0,29	0,26	0,26	0,17	0,17	0,12	0,12	0,08	0,08	0,06	0,06
0,50	R	75,3	65,7	25,4	2,18	7,79	6,58	2,64	2,21	0,88	0,73	0,29	0,24	0,13	0,11	0,05	0,04	0,02	0,02	0,01	0,01
	V	3,07	3,07	1,96	1,96	1,20	1,20	0,77	0,77	0,49	0,49	0,31	0,31	0,22	0,22	0,15	0,15	0,10	0,10	0,08	0,08
0,60	R	105	92,4	35,3	30,5	10,7	9,18	3,65	3,07	1,22	1,02	0,41	0,33	0,18	0,15	0,08	0,06	0,03	0,02	0,02	0,01
	V	3,68	3,68	2,36	2,36	1,44	1,44	0,92	0,92	0,58	0,58	0,37	0,37	0,26	0,26	0,18	0,18	0,12	0,12	0,09	0,09
0,70	R	139		46,1	40,7	14,2	12,1	4,81	4,06	1,60	1,34	0,53	0,44	0,23	0,19	0,10	0,08	0,04	0,03	0,02	0,02
	V	4,30		2,75	2,75	1,68	1,68	1,07	1,07	0,68	0,68	0,43	0,43	0,30	0,30	0,21	0,21	0,14	0,14	0,11	0,11
0,80	R	178		59,7	52,2	18,1	15,5	6,11	5,18	2,03	1,71	0,67	0,56	0,29	0,24	0,12	0,10	0,05	0,04	0,03	0,02
	V	4,91		3,14	3,14	1,93	1,93	1,23	1,23	0,78	0,78	0,49	0,49	0,35	0,35	0,24	0,24	0,16	0,16	0,12	0,12
0,90	R			74,0	65,1	22,4	19,3	7,54	6,43	2,51	2,11	0,83	0,69	0,36	0,30	0,15	0,13	0,06	0,05	0,03	0,03
	V			3,54	3,54	2,17	2,17	1,39	1,39	0,87	0,87	0,55	0,55	0,39	0,39	0,27	0,27	0,18	0,18	0,14	0,14
1,00	R			89,8		27,1	23,5	9,12	7,80	3,03	2,56	1,01	0,84	0,44	0,36	0,18	0,15	0,07	0,06	0,04	0,03
	V			3,93		2,41	2,41	1,54	1,54	0,97	0,97	0,61	0,61	0,43	0,43	0,30	0,30	0,20	0,20	0,15	0,15
1,20	R			125		37,8	33,0	12,6	10,9	4,19	3,57	1,38	1,16	0,60	0,50	0,25	0,21	0,10	0,08	0,05	0,04
	V			4,72		2,89	2,89	1,84	1,84	1,17	1,17	0,73	0,73	0,52	0,52	0,36	0,36	0,24	0,24	0,19	0,19
1,40	R					50,1	44,0	16,7	14,5	5,63	4,73	1,82	1,54	0,79	0,67	0,33	0,28	0,13	0,10	0,07	0,06
	V					3,37	3,37	2,15	2,15	1,36	1,36	0,86	0,86	0,61	0,61	0,42	0,42	0,28	0,28	0,22	0,22
1,60	R					64,0	56,6	21,3	18,5	7,04	6,04	2,31	1,96	1,01	0,85	0,42	0,35	0,16	0,13	0,09	0,07
	V					3,85	3,85	2,48	2,48	1,88	1,88	0,98	0,98	0,69	0,69	0,48	0,48	0,32	0,32	0,25	0,25
1,80	R					79,5		26,4	23,1	8,71	7,50	2,85	2,43	1,24	1,05	0,52	0,44	0,20	0,16	0,11	0,09
	V					4,33		2,76	2,76	1,75	1,75	1,10	1,10	0,78	0,78	0,54	0,54	0,36	0,36	0,28	0,28
2,00	R					96,7		32,0	28,1	10,5	9,11	3,54	2,94	1,50	1,27	0,63	0,53	0,24	0,20	0,13	0,11
	V					4,81		3,07	3,07	1,94	1,94	1,22	1,22	0,87	0,87	0,60	0,60	0,40	0,40	0,31	0,31
2,20	R					115		38,2	33,6	12,5	10,8	4,11	3,61	1,78	1,51	0,74	0,63	0,28	0,24	0,15	0,12
	V					5,30		3,38	3,38	2,14	2,14	1,35	1,35	0,98	0,98	0,66	0,66	0,44	0,44	0,34	0,34
2,40	R							44,8	39,6	14,6	12,7	4,79	4,11	2,08	1,77	0,87	0,73	0,33	0,28	0,17	0,15
	V							3,68	3,68	2,33	2,33	1,47	1,47	1,04	1,04	0,72	0,72	0,48	0,48	0,37	0,37
2,60	R							57,9		16,9	14,8	5,64	4,77	2,40	2,05	1,01	0,85	0,38	0,32	0,20	0,17
	V							3,99		2,53	2,53	1,59	1,59	1,13	1,13	0,78	0,78	0,52	0,52	0,40	0,40
2,80	R							59,6		19,4	17,0	6,33	5,47	2,75	2,35	1,14	0,97	0,43	0,36	0,23	0,19
	V							4,30		2,72	2,72	1,71	1,71	1,21	1,21	0,84	0,84	0,56	0,56	0,43	0,43
3,00	R							67,7		22,0	19,3	7,18	6,21	3,11	2,67	1,29	1,10	0,49	0,41	0,26	0,22
	V							4,61		2,91	2,91	1,84	1,84	1,30	1,30	0,90	0,90	0,60	0,60	0,46	0,46

Mission
Quality policy
Raw material
Product range
Application areas
Pipes
Fittings
Mounting guidelines
Welding
Insulation
Service life
Pressure test
Chemical compatibility
Quality assurance
Boxing and shipping
Contacts

Pressure test

Continous pressure drop SDR 7,4 20° / 67°

Rugosity	0,007 mm	0,007 mm
Specific weight	998,00 kg/m3	
Temperature	20° C	67° C
Viscosity	1,02E-06 m²/s	4,30E-07 m2/s

Legend symbols
977,20 kg/m3 Q= flow (l/s) De= Ø ext. (mm) Di= Ø int. (mm)
R= continous pressure drop (mbar/m)
V= speed (m/s)

Q = l/s	De Di	20 mm 14,4 mm	25 mm 18,0 mm	32 mm 23,2 mm	40 mm 29,0 mm	50 mm 36,2 mm		63 mm 45,8 mm		75 mm 54,4 mm		90 mm 65,4 mm		110 mm 79,8 mm		125 mm 90,8 mm	
3,20	R				76,3	24,8	21,8	8,07	7,00	3,50	3,00	1,45	1,24	0,55	0,46	0,29	0,25
	V				4,91	3,11	3,11	1,96	1,96	1,39	1,39	0,96	0,96	0,64	0,64	0,49	0,49
3,40	R				85,3	27,7	24,4	9,01	7,83	3,90	3,35	1,62	1,28	0,61	0,52	0,32	0,27
	V				5,22	3,30	3,30	2,08	2,08	1,47	1,47	1,02	1,02	0,68	0,68	0,53	0,53
3,60	R					30,8		10,1	8,70	4,33	3,73	1,80	1,54	0,68	0,57	0,36	0,30
	V					3,50		2,20	2,20	1,56	1,56	1,08	1,08	0,72	0,72	0,56	0,56
3,80	R					34,0		11,0	9,62	4,77	4,12	1,98	1,69	0,75	0,63	0,40	0,33
	V					3,69		2,33	2,33	1,68	1,68	1,15	1,15	0,76	0,76	0,59	0,59
4,00	R					37,4		12,1	10,5	5,24	4,53	2,17	1,86	0,82	0,69	0,43	0,37
	V					3,89		2,45	2,45	1,73	1,73	1,21	1,21	0,80	0,80	0,62	0,62
4,20	R					41,0		13,2	11,6	5,72	4,96	2,37	2,04	0,89	0,76	0,47	0,40
	V					4,08		2,57	2,57	1,82	1,82	1,27	1,27	0,84	0,84	0,65	0,65
4,40	R					44,6		14,4	12,6	6,23	5,40	2,58	2,22	0,97	0,83	0,52	0,44
	V					4,28		2,69	2,69	1,91	1,91	1,33	1,33	0,88	0,88	0,68	0,68
4,60	R					48,5		15,6	13,7	6,75	5,86	2,80	2,41	1,05	0,90	0,56	0,47
	V					4,47		2,82	2,82	1,99	1,99	1,39	1,39	0,92	0,92	0,71	0,71
4,80	R					52,4		16,9	14,8	7,30	6,35	3,02	2,60	1,14	0,97	0,60	0,51
	V					4,66		2,94	2,94	2,08	2,08	1,45	1,45	0,96	0,96	0,74	0,74
5,00	R					56,6		18,2	16,0	7,86	6,85	3,25	2,81	1,22	1,04	0,65	0,55
	V					4,86		3,06	3,06	2,17	2,17	1,51	1,51	1,00	1,00	0,77	0,77
5,20	R					60,8		19,6	17,2	8,44	7,36	3,49	3,02	1,31	1,12	0,70	0,59
	V					5,05		3,18	3,18	2,25	2,25	1,57	1,57	1,04	1,04	0,80	0,80
5,40	R							21,0		9,05	7,90	3,74	3,24	1,40	1,20	0,74	0,63
	V							3,31		2,34	2,34	1,63	1,63	1,09	1,09	0,83	0,83
5,60	R							22,4		9,67	8,45	4,00	3,46	1,50	1,29	0,79	0,68
	V							3,43		2,43	2,43	1,69	1,69	1,13	1,13	0,86	0,86
5,80	R							23,9		10,3	9,03	4,26	3,69	1,60	1,37	0,85	0,72
	V							3,55		2,51	2,51	1,75	1,75	1,17	1,17	0,90	0,90
6,00	R							25,5		10,9	9,61	4,53	3,93	1,70	1,46	0,90	0,77
	V							3,67		2,60	2,60	1,81	1,81	1,21	1,21	0,93	0,93
6,20	R							27,1		11,6	10,2	4,81	4,18	1,80	1,55	0,95	0,82
	V							3,80		2,69	2,69	1,87	1,87	1,25	1,25	0,96	0,96
6,40	R							28,7		12,3	10,8	5,10	4,43	1,91	1,64	1,01	0,86
	V							3,92		2,77	2,77	1,93	1,93	1,29	1,29	0,99	0,99
6,60	R							30,4		13,0	11,4	5,39	4,69	2,02	1,74	1,07	0,92
	V							4,04		2,86	2,86	1,99	1,99	1,33	1,33	1,02	1,02
6,80	R							32,1		13,8	12,1	5,69	4,96	2,13	1,84	1,13	0,97
	V							4,16		2,95	2,95	2,05	2,05	1,37	1,37	1,05	1,05
7,00	R							33,9		14,5	12,8	6,00	5,23	2,25	1,94	1,19	1,02
	V							4,29		3,03	3,03	2,11	2,11	1,41	1,41	1,08	1,08
7,50	R							38,5		16,5	14,6	6,81	5,95	2,55	2,20	1,27	1,16
	V							4,59		3,25	3,25	2,26	2,26	1,51	1,51	1,16	1,16
8,00	R							43,4		18,6		7,66	6,71	2,86	2,48	1,51	1,30
	V							4,90		3,47		2,41	2,41	1,61	1,61	1,24	1,24
9,00	R							54,1		23,1		9,51	8,36	3,55	3,08	1,87	1,62
	V							5,51		3,90		2,71	2,71	1,81	1,81	1,39	1,39
10,00	R									28,1		11,5	10,1	4,30	3,75	2,27	1,97
	V									4,33		3,01	3,01	2,01	2,01	1,54	1,54

Mission
Quality policy
Raw material
Product range
Application areas
Pipes
Fittings
Mounting guidelines
Welding
Insulation
Service life
Pressure test
Chemical compatibility
Quality assurance
Boxing and shipping
Contacts

Chemical compatibility

This chart shows the chemical resistance of polypropylene resin under static conditions and not under pressure.

- **1 = negligible effect:** the material should be suitable for all applications where these environmental conditions exist.
- **2 = limited absorption or attack:** the material should be suitable for most applications but the user is advised to carry out his/her own tests to determine the suitability of polypropylene in a particular environment.
- **3 = extensive absorption and/or rapid permeation:** the material should be suitable for applications where only intermittent service is involved, or where the swelling produced has no detrimental effect on the part. The user should carry out his/her own tests to determine the suitability of polypropylene in a particular environment.
- **4 = extensive attack:** the specimen dissolves or disintegrates. Polypropylene is not recommended.

Environment	Conc. %	Temp. 20°C	60°C	100°C
Acetic acid (glacial)	97	1	2 (80°C)	-
Acetic acid	50	1	1 (80°C)	-
Acetic acid	40	1	-	-
Acetic acid	10	1	1	-
Acetone	100	1	1	-
Acetophenone	100	2	2	-
Acriflavine (2% solution in H_2O)	2	1	1	- (80°C)
Acrylic emulsions		1	1	-
Aluminum chloride		1	1	-
Aluminum fluoride		1	1	-
Aluminum sulfate		1	1	-
Alums (all types)		1	1	-
Ammonia (aqueous)	30	1	-	-
Ammonia gas (dry)		1	1	-
Ammonium carbonate	Satd.	1	1	-
Ammonium chloride	Satd.	1	1	-
Ammonium fluoride	20	1	1	-
Ammonium hydroxide	10	1	1	-
Ammonium metaphosphate	Satd.	1	1	-
Ammonium nitrate	Satd.	1	1	-
Ammonium persulfate	Satd.	1	1	-
Ammonium sulfate	Satd.	1	1	-
Ammonium sulfide	Satd.	1	1	-
Ammonium thiocyanate	Satd.	1	1	-
Amyl acetate	100	2	3	-
Amyl alcohol	100	1	2	-
Amyl chloride	100	3	3	-
Aniline	100	1	1	-
Anisole	100	2	2	-
Antimony chloride		1	1	-
Aviation fuel (115/145 octane)	100	2	3	-
Aviation turbine fuel	100	2	3	-

Mission
Quality policy
Raw material
Product range
Application areas
Pipes
Fittings
Mounting guidelines
Welding
Insulation
Service life
Pressure test
Chemical compatibility
Quality assurance
Boxing and shipping
Contacts

Chemical compatibility

Environment	Conc. %	Temp. 20°C	60°C	100°C
Barium carbonate	Satd.	1	1	-
Barium chloride	Satd.	1	1	-
Barium hydroxide		1	1	-
Barium sulfate	Satd.	1	1	-
Barium sulfide	Satd.	1	1	-
Beer		1	1	-
Benzene	100	2	3	3
Benzoic acid	A	1	-	
Benzyl alcohol		1	1	-
Bismuth carbonate	Satd.	1	1	-
Borax		1	1	-
Boric acid		1	1	-
Brine	Satd.	1	1	-
Bromine liquid	100	4	-	-
Bromine water	(a)	3	-	-
Butyl acetate	100	3	3	-
Butyl alcohol	100	1	1	-
Calcium carbonate	Satd.	1	1	-
Calcium chlorate	Satd.	1	1	-
Calcium chloride	50	1	1	-
Calcium hydroxide		1	1	-
Calcium hypochlorite bleach	20(a)	1	2	-
Calcium nitrate		1	1	-
Calcium phosphate	50	1	-	-
Calcium sulfate		1	1	-
Calcium sulfite		1	1	-
Carbon dioxide (dry)		1	1	-
Carbon dioxide (wet)		1	1	-
Carbon disulfide	100	2	3	-
Carbon monoxide		1	1	-
Carbon tetrachloride	100	3	3	3
Carbonic acid		1	1	-
Castor oil		1	-	-

Environment	Conc. %	Temp. 20°C	60°C	100°C
Cetyl alcohol	100	1	-	-
Chlorine (gas)	100	4	4	-
Chlorobenzene	100	3	3	-
Chloroform	100	3	4	4
Chlorosulfonic acid	100	4	4	4
Chrome alum		1	1	-
Chromic acid	80(a)	1	-	-
Chromic acid	50(a)	1	1	-
Chromic acid	10(a)	1	1	-
Chromic/sulfuric acid		4	4	-
Cider		1	1	-
Citric acid	10	1	1	-
Copper chloride	Satd.	1	1	-
Copper cyanide	Satd.	1	1	-
Copper fluoride	Satd.	1	1	-
Copper nitrate	Satd.	1	1	-
Copper sulfate	Satd.	1	1	-
Cottonseed oil		1	1	-
Cuprous chloride	Satd.	1	1	-
Cyclohexanol	100	1	2	-
Cyclohexanone	100	2	3	-
Decalin	100	3	3	3
Detergents	2	1	1	1
Developers (photographic)		1	1	-
Dibutyl phthalate	100	1	2	4
Dichloroethylene	100	1	-	-
Diethanolamine	100	1	1	-
Diisooctyl phthalate	100	1	1	-
Emulsifiers		1	1	-
Ethanolamine	100	A	1	-
Ethyl acetate	100	2	2	-
Ethyl alcohol	96	1	1 (80°C)	-

Mission
Quality policy
Raw material
Product range
Application areas
Pipes
Fittings
Mounting guidelines
Welding
Insulation
Service life
Pressure test
Chemical compatibility
Quality assurance
Boxing and shipping
Contacts

Chemical compatibility

Environment	Conc. %	Temp. 20°C	60°C	100°C
Ethyl chloride	100	3	3	-
Ethylene dichloride	100	2	-	-
Ethylene glycol		1	1	-
Ethylene oxide	100	2 (10°C)	-	-
Ethyl ether	100	B	-	-
Fatty acids (C_6)	100	1	1	-
Ferric chloride	Satd.	1	1	-
Ferric nitrate	Satd.	1	1	-
Ferric sulfate	Satd.	1	1	-
Ferrous chloride	Satd.	1	1	-
Ferrous sulfate	Satd.	1	1	-
Fluorosilicic acid		1	1	-
Formaldehyde	40	1	1	-
Formic acid	100	1	-	-
Formic acid	10	1	1	-
Fructose		1	1	-
Fruit juices		1	1	-
Furfural	100	3	3	-
Gas liquor		3	-	-
Gasoline	100	2	3	3
Gearbox oil	100	1	2	-
Gelatin		1	1	-

Environment	Conc. %	Temp. 20°C	60°C	100°C
Glucose	20	1	1	-
Glycerin	100	1	1	1
Glycol		1	1	-
Hexane	100	1	2	-
Hydrobromic acid	50(a)	1	1	-
Hydrobromic acid	30(a)	1	2	4
Hydrobromic acid	20	1	1 (80°C)	-
Hydrobromic acid	10	1	1 (80°C)	2
Hydrobromic acid	2	1	1	1
50-50 HCl-HNO_3	(a)	2	4 (80°C)	-
Hydrofluoric acid	40	1	-	-
Hydrofluoric acid	60(a)	1	1 (40°C)	-
Hydrogen chloride gas (dry)	100	1	1	-
Hydrogen peroxide	30	1	-	4
Hydrogen peroxide	10	1	2	-
Hydrogen peroxide	3	1	-	-
Hydrogen sulfide		1	1	-
Hydroquinone		1	1	-
Inks		1	1	-
Iodine tincture		1	-	-
Isooctane	100	3	3	-
Isopropyl alcohol	100	1	1	-
Ketones		1	-	-

Mission
Quality policy
Raw material
Product range
Application areas
Pipes
Fittings
Mounting guidelines
Welding
Insulation
Service life
Pressure test
Chemical compatibility
Quality assurance
Boxing and shipping
Contacts

Chemical compatibility

Environment	Conc. %	Temp. 20°C	60°C	100°C
Lactic acid	20	1	1	-
Lanolin	100	1	1	-
Lead acetate	Satd.	1	1	-
Linseed oil	100	1	1	-
Lubricating oil	100	1	2	-
Magenta dye (aqueous solution)	2	1	1 Some staining	-
Magnesium carbonate	Satd.	1	1	-
Magnesium chloride	Satd.	1	1	-
Magnesium hydroxide	Satd.	1	1	-
Magnesium nitrate	Satd.	1	1	-
Magnesium sulfate	Satd.	1	1	-
Magnesium sulfite	Satd.	1	1	-
Meat juices		1	1	-
Mercuric chloride	40	1	1	-
Mercuric cyanide	Satd.	1	1	-
Mercurous nitrate	Satd.	1	1	-
Mercury	100	1	1	-
Methyl alcohol	100	1	1	-
Methylene chloride	100	1	-	-
Methyl ethyl ketone	100	1	2	-
Milk and its products		1	1	1
Mineral oil	100	1	2	-
Molasses		1	1	-
Motor oil	100	1	2	-
Naphthalene	100	1	1	1
Nickel chloride	Satd.	1	1	-

Environment	Conc. %	Temp. 20°C	60°C	100°C
Nickel nitrate	Satd.	1	1	-
Nickel sulfate	Satd.	1	1	-
Nitric acid	fuming	4	4	4
Nitric acid	70(a)	3	4	-
Nitric acid	60	1	4 (80°C)	-
Nitric acid	10	1	1	1
50-50 HNO_3-HCl	(a)	2	4 (80°C)	-
50-50 HNO_3-H_2SO_4	(a)	3	4 (80°C)	-
Nitrobenzene	100	1	1	-
Oleic acid		1	2	-
Oleum		-	-	4
Olive oil	100	1	1	-
Oxalic acid (aqueous)	50	1	2	-
Paraffin	100	1	2	-
Paraffin wax	100	1	1	-
Petrol	100	2	3	-
Petroleum ether (boiling point 100°-140°C)	100	3	3	-
Phenol	100	1	1	-
Phosphoric acid	95	1	1	-
Plating solutions, brass		1	1	-
Plating solutions, cadmium		1	1	-
Plating solutions, chromium		1	1	-
Plating solutions, copper		1	1	-
Plating solutions, gold		1	1	-
Plating solutions, indium		1	1	-

Mission
Quality policy
Raw material
Product range
Application areas
Pipes
Fittings
Mounting guidelines
Welding
Insulation
Service life
Pressure test
Chemical compatibility
Quality assurance
Boxing and shipping
Contacts

Chemical compatibility

Environment	Conc. %	Temp. 20°C	60°C	100°C
Plating solutions, lead		1	1	-
Plating solutions, nickel		1	1	-
Plating solutions, rhodium		1	1	-
Plating solutions, silver		1	1	-
Plating solutions, tin		1	1	-
Plating solutions, zinc		1	1	-
Potassium bicarbonate	Satd.	1	1	-
Potassium borate	1	1	1	-
Potassium bromate	10	1	1	-
Potassium bromide	Satd.	1	1	-
Potassium carbonate	Satd.	1	1	-
Potassium chlorate	Satd.	1	1	-
Potassium chloride	Satd.	1	1	-
Potassium chromate	40	1	1	-
Potassium cyanide	Satd.	1	1	-
Potassium dichromate	40	1	1	-
Potassium ferri-/ferrocyanide		1	1	-
Potassium fluoride		1	1	-
Potassium hydroxide	50	1	1	-
Potassium hydroxide	10	1	1	1
Potassium nitrate	Satd.	1	1	-
Potassium perborate	Satd.	1	1	-
Potassium perchlorate	10	1	1	-
Potassium permanganate	20	1	1	-
Potassium sulfate		1	1	-
Potassium sulfide		1	1	-
Potassium sulfite		1	1	-
Propyl alcohol	100	1	1	-
Pyridine	100	1	-	-

Environment	Conc. %	Temp. 20°C	60°C	100°C
Silicone oil	100	1	1	-
Soap solution (concentrated)		1	1	-
Sodium acetate		1	1	-
Sodium bicarbonate	Satd.	1	1	-
Sodium bisulfate	Satd.	1	1	-
Sodium bisulfite	Satd.	1	1	-
Sodium borate		1		-
Sodium bromide oil solution		1	1	-
Sodium carbonate	Satd.	1	1	-
Sodium chlorate	Satd.	1	1	-
Sodium chloride	Satd.	1	1	1
Sodium chlorite	2	1	1 (80°C)	-
Sodium chlorite	5	1 (80°C)	1	-
Sodium chlorite	10	1 (80°C)	1	-
Sodium chlorite	20	1 (80°C)	1	-
Sodium cyanide	Satd.	1	1	-
Sodium dichromate	Satd.	1	1	-
Sodium ferricyanide	Satd.	1	1	-
Sodium ferrocyanicle	Satd.	1	1	-
Sodium fluoride	Satd.	1	1	-
Sodium hydroxide	50	1	1	-
Sodium hydroxide	10	1	1	1
Sodium hypochlorite	20	1	2	2
Sodium nitrate		1	1	-
Sodium nitrite		1	1	-
Sodium silicate		1	1	-
Sodium sulfate	Satd.	1	1	-

Mission
Quality policy
Raw material
Product range
Application areas
Pipes
Fittings
Mounting guidelines
Welding
Insulation
Service life
Pressure test
Chemical compatibility
Quality assurance
Boxing and shipping
Contacts

Chemical compatibility

Environment	Conc. %	Temp. 20°C	60°C	100°C
Sodium sulfite	Satd.	1	1	-
Stannic chloride	Satd.	1	1	-
Stannous chloride	Satd.	1	1	-
Starch		1	1	-
Sugars and syrups		1	1	-
Sulfamic acid		1	1 (80°C)	-
Sulfates of Calcium and magnesium		1	1	-
Sulfates of potassium and sodium	Satd.	1	1	-
Sulfur		1	1	-
Sulfuric acid	98(a)	3	-	4
Sulfuric acid	60	1	2 (80°C)	-
Sulfuric acid	50	1	2	-
Sulfuric acid	10	1	1	1
50-50 H_2SO_4/HNO_3	(a)	3	4 (80°C)	-
Tallow		1	1	-
Tannic acid	10	1	1	-
Tartaric acid		1	1	-
Tetrahydrofuran	100	3	3	3
Tetralin	100	3	3	3
Toluene	100	3	3	-
Transformer oil	100	1	3	-
Trichloroacetic acid	10	1	1	-
Trichloroethylene	100	1	1 (80°C)	-
Turpentine	100	3	3	3

Environment	Conc. %	Temp. 20°C	60°C	100°C
Urea		1	1	-
Urine		1	1	-
Water (distilled, soft, hard and vapor)		1	1	1
Wet chlorine gas		-	4 (70°C)	-
Whiskey		1	1	1
White Paraffin	100	1	2 (80°C)	-
White spirit	100	2	3	-
Wines		1	1	-
Xylene	100	3	3	3
Yeast		1	1	-
Zinc chloride	Satd.	1	1	-
Zinc oxide		1	1	-
Zinc sulfate	Satd.	1	1	-

Mission
Quality policy
Raw material
Product range
Application areas
Pipes
Fittings
Mounting guidelines
Welding
Insulation
Service life
Pressure test
Chemical compatibility
Quality assurance
Boxing and shipping
Contacts

Quality assurance

Plastofer is well-known for its high quality products. We produce in compliance with European EN ISO 15874 and German standards DIN 8077, DIN 8078.

The laboratory is well equipped with state-of-the-art devices to test raw materials, production process and end products.

- The control of basic raw material i.e. polypropylene through determination of mass flow rate (MFR) and density measure.
- Check of geometric parameters during the production process by means of inspection and electronic gauges.
- Optical microscope testing – structure of raw material in end products, welded joints after tests and the quality of plastic connection with threaded inserts.
- Laboratory tests of end products - a reflection of the extreme conditions of use, among others, determination of inner pressure resistance.

Standard applied in production:

- DIN 8077 Polypropylene (PP) Pipes, Dimensions.
- DIN 8078 Polypropylene (PP) Pipes, General Quality Requirements and Testing.
- DIN 16962 Pipe Joint Assemblies and Fittings for Polypropylene Pressure Pipes.
- EN ISO 15874 Plastic pipe systems for hot and cold water installation.
- Drinking water tested by authorized office.

Mission
Quality policy
Raw material
Product range
Application areas
Pipes
Fittings
Mounting guidelines
Welding
Insulation
Service life
Pressure test
Chemical compatibility
Quality assurance
Boxing and shipping
Contacts

Boxing and shipping

Protection and storage conditions

Protect components from ultraviolet (UV) radiation, weather, and contamination. UV exposure degrades polypropylene; long-term sunlight reduces system performance.

For outdoor storage or unprotected outdoor installations, move items indoors or cover them with suitable UV-resistant insulation/jacketing.

Stacking and handling

Support plastic pipes along their full length or otherwise prevent deflection when stacked.

Store pipes and fittings in sacks, on pallets, or in boxes/containers/baskets. When pipes are in plastic sleeves and/or fittings in plastic sacks, do not exceed a maximum stack height of 1.2 m.

Store different pipe and fitting types separately.

Do not drag pipes across the ground or vehicle decks. Do not throw pipes or let them drop from vehicles.

Transport

Protect pipes from mechanical damage during transport and keep them off dirty or solvent-contaminated surfaces.

Avoid direct heat sources (e.g., radiators, hot exhausts). Use suitable supports/underlays.

Supply pipes in protective covers (e.g., polyethylene bags) and fittings in sacks or cartons; keep them packaged as long as practical prior to installation to minimise contamination.

Low temperature handling

Exercise particular care at 0 °C and below; impact resistance is reduced and damage risk increases.

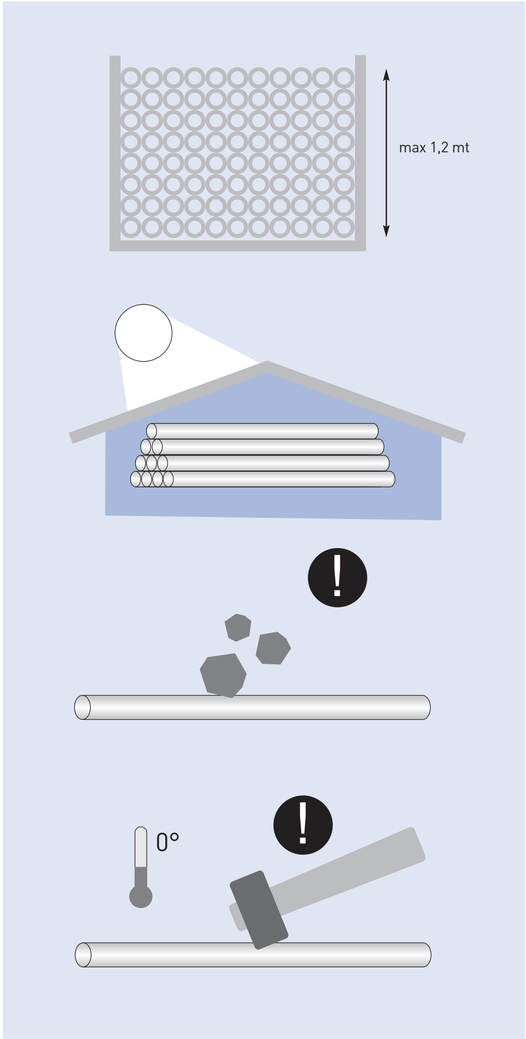

Mission
Quality policy
Raw material
Product range
Application areas
Pipes
Fittings
Mounting guidelines
Welding
Insulation
Service life
Pressure test
Chemical compatibility
Quality assurance
Boxing and shipping
Contacts

Boxing and shipping

Example of loading for international Standard Container

40'' feet Container

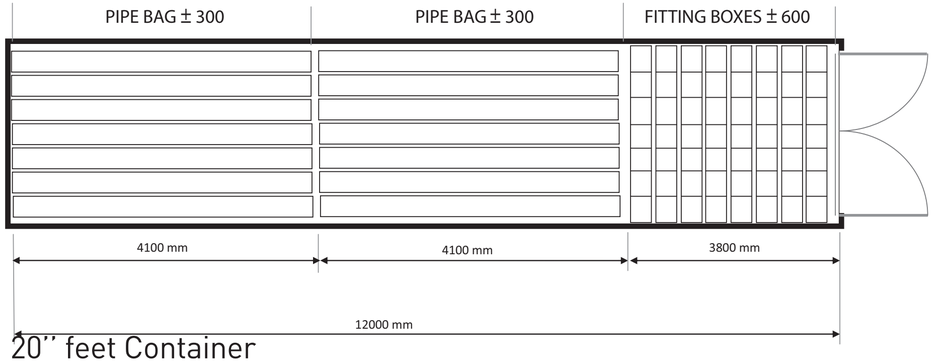

Max Bags n 600
Max Boxes n 600

20'' feet Container

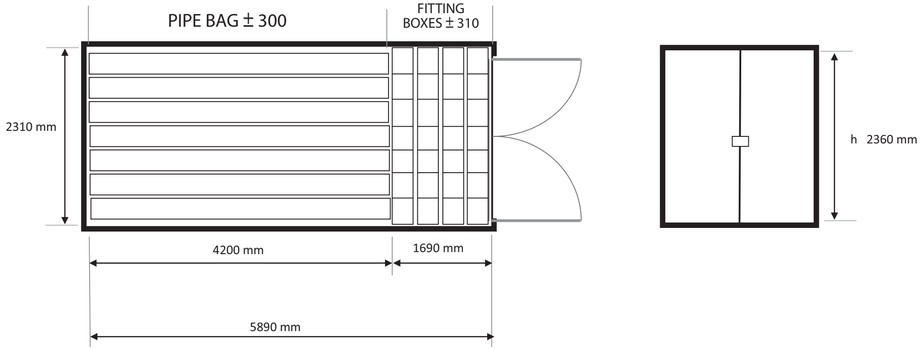

Max Bags n 300
Max Boxes n 310

Mission
Quality policy
Raw material
Product range
Application areas
Pipes
Fittings
Mounting guidelines
Welding
Insulation
Service life
Pressure test
Chemical compatibility
Quality assurance
Boxing and shipping
Contacts

Contacts

via Cairate, 18 - 00135 Roma (Italy)
ph + 39 06 30998673 r.a.
fax + 39 06 3090412
email: info@plastofer.it / exportsales@plastofer.it

www.plastofer.com

Plastofer®
Made in Italy